Environmental Health Perspectives
Vol. 11, pp. 53–57, 1975

Industrial Preparation of Poly(vinyl Chloride)

by G. F. Cohan*

Vinyl chloride (VCM) is unloaded from railroad tank cars or tank trucks into pressurized storage spheres. VCM, emulsifiers, and catalysts are metered into polymerization vessels wherein PVC is produced through a chemical reaction in an aqueous medium under controlled conditions of temperature and pressure. After the reaction reaches a predetermined completion, the contents are transferred to a secondary vessel wherein steam is injected and the VCM containing vapors are pumped to a recovery system. The VCM-containing vapors are compressed, cooled, condensed, decanted, and recycled to the process for reuse. The stripped PVC resin water slurry is then pumped to blending tanks where the batches from multiple reaction vessels are blended for product uniformity. From the plant tanks the PVC resin water slurry is pumped to a dewatering centrifuge, where approximately 90% of the water is removed and subsequently discharged to the industrial sewer system. The PVC resin wet cake is conveyed from the centrifuge to a flash dryer where essentially all the remaining water is removed. At this point, the dry resin is buoyant in an air stream and enters a two-stage collection system for separation of conveying air. The PVC resin is then screened and air-conveyed to storage for bulk shipment, compounding, or bagging.

Introduction

Since its commercial introduction in the United States in the mid-1930's, applications for poly(vinyl chloride) (PVC) have grown rapidly so that the output in 1973 amounted to 4.7 billion pounds. Worldwide production amounted to about 18.0 billion pounds.

End products result from three distinct phases of manufacturing: synthesis of vinyl chloride monomer (VCM); polymerization of vinyl chloride; and processing of poly(vinyl chloride) resins into finished products.

Since our concern here is that portion of the total process during which personnel may be exposed to vinyl chloride, the manufacture of the polymer will be described, since neither of the other phases results in significant exposure.

By way of background, a brief description of the manufacture of the monomer itself may be helpful.

Vinyl Chloride

Chemically, vinyl chloride is composed of about 57% by weight of chlorine and 43% of hydrocarbon (ethylene). Chlorine is derived from salt in an electrolytic process.

In this country, ethylene is based largely on ethane and propane obtained from natural gas liquids, though petroleum is becoming an increasingly important source.

Chlorine and ethylene are reacted to form ethylene dichloride which is cracked to vinyl chloride and hydrogen chloride (Fig. 1). The latter by product is reacted with additional ethylene and air to form more ethylene dichloride which is then fed back to the cracking process. Since vinyl chloride is a gas at room temperature, with a boiling point of —13°C, it is stored and shipped under pressure.

Exposure to vinyl chloride monomer (VCM) in this segment of the process is less than that in the production of polymer because the manufacture is carried out in a continuous process in a closed system outdoors.

Poly(vinyl Chloride)

Unlike the manufacture of vinyl chloride monomer, the polymer is made in a batch rather than by a continuous process. This is true of

* B. F. Goodrich Chemical Company, Cleveland, Ohio 44131.

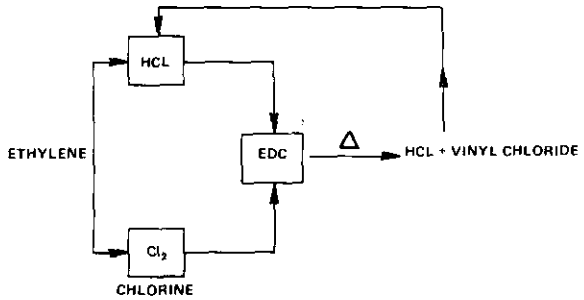

FIGURE 1. Schematic drawing of vinyl chloride manufacture.

each of the basic commercial methods for manufacturing poly(vinyl chloride).

Table 1 indicates the different methods of polymerizing PVC as well as the approximate percentage of total production in the United States by each method.

Table 1. Methods of PVC manufacture.

Method	% of total U.S. production, 1973
Suspension	80
Emulsion	11
Mass	7
Solution	2
	100

Since the suspension process is, by far, the most widely used, this method will be described.

Suspension Process

Monomer Handling

Vinyl chloride monomer is received at the polymer plant in railroad tank cars under pressure. Pressures depend on temperature and vary from atmospheric in the winter to 100 psig in the summer. The monomer is pumped from the car to a storage tank or sphere. Thereafter, it is pumped to a day tank prior to being filtered and introduced into the reaction vessel (Fig. 2).

Polymerization

Vinyl chloride monomer is polymerized in water and maintained in suspension under agitation. The chemical reaction is carried out

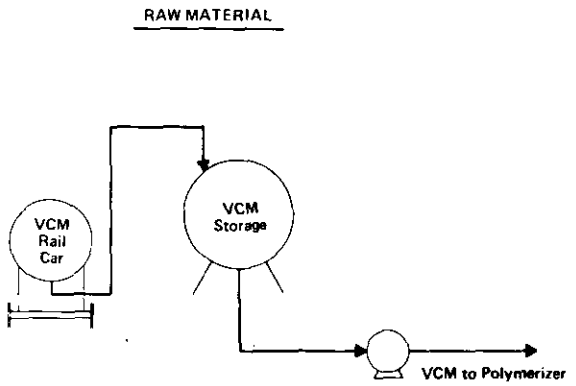

FIGURE 2. Handing of vinyl chloride (VCM) at polymer plant.

under controlled temperature conditions in the presence of a catalyst.

The reaction vessel or polymerizer, which is water jacketed to remove heat and permit close control of temperature, is closed and put under vacuum. Water plus suspending agents and catalyst, and later vinyl chloride, are all metered into the polymerizer and stirred. The reaction begins as the contents are brought up to the desired temperature by heating (Fig. 3).

The temperature of the reaction controls the molecular weight. Since the reaction is exothermic, controlled amounts of cooling water are

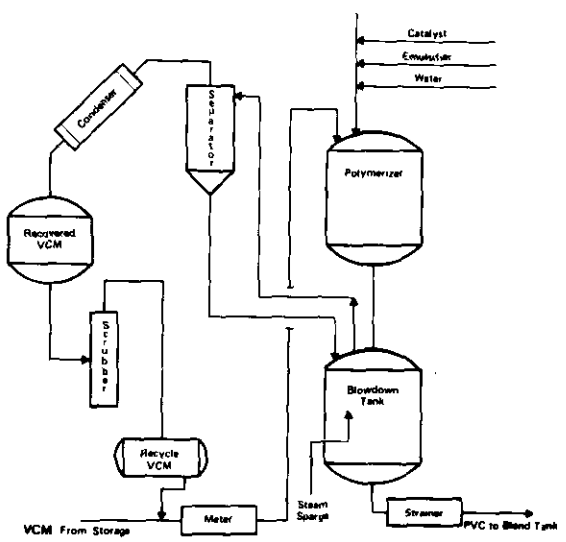

FIGURE 3. Polymerization and recovery of unreacted VCM.

circulated in the jacket to maintain the desired temperature. Since resins of different molecular weight are required to meet today's many applications, conditions are modified to achieve desired properties. Typical reactions might be carried out from 40 to 60°C, which corresponds to pressures of about 100 to 140 psi, depending on desired molecular weight. Reaction times vary with specific resins but are typically about 10 hr.

Reactions do not go to completion but are taken to a predetermined end point which may be measured by time and/or pressure drop. There is considerable shrinkage in volume as can be noted from the change in specific gravity from monomer at 0.91 to polymer at 1.40.

Upon completion of the reaction, the contents are discharged to a blowdown tank for recovery of unreacted vinyl chloride monomer. Through this step, the process is a closed one under pressure or vacuum at all times. Monomer is removed by a multistage stripping process. The vinyl chloride passes through a separator to remove water and is compressed, cooled, condensed, decanted, scrubbed, and recycled to the process. Inert gases, such as nitrogen from air, which contain small amounts of monomer, pass through a secondary cooling and condensation step before being vented to the atmosphere.

Dewatering and Drying

The stripped resin slurry is pumped to a blend tank where batches from several reaction vessels are blended for product uniformity (Fig. 4). This tank is maintained at atmospheric pressure and the vapor space is constantly purged with air to prevent possible accumulation of residual monomer which is still trapped in the resin particles.

The slurry is then pumped to a dewatering centrifuge where 90% of the water is removed. This water, which contains some PVC fines, is treated in the plant effluent treatment system before being discharged to the sewer.

The PVC wet cake is conveyed to a dryer which may be a flash, rotary, or fluidized bed type. At this point, essentially all of the water

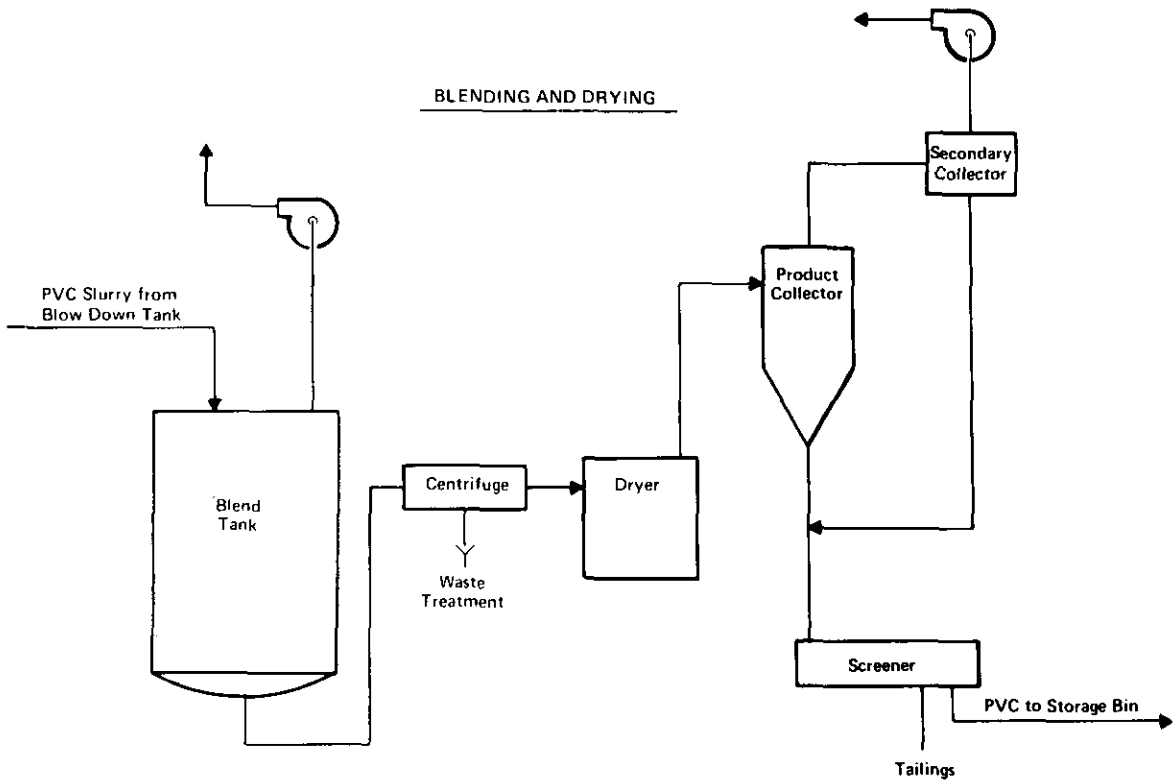

FIGURE 4. Blending and drying of polymer (PVC).

is removed. Large volumes of air (10,000 to 30,000 scfm) are preheated to 135–150°C entering the driers. The air stream from the driers passes through a two-stage collection system to separate the solids and the moisture laden air is vented to the atmosphere.

The dry resin is then conveyed by air through a screener to separate coarse from prime product. The prime product is then conveyed to storage for bulk shipment, bagging, or compounding. The conveying air passes through a cyclone separator and, finally, bag filters before being discharged to the atmosphere.

Exposure to Vinyl Chloride

The mechanical equipment used in both monomer and polymer plants consists of multiple units of vessels, pumps, piping, and valves, etc. with many potential sources of small fugitive or elusive leakage of vinyl chloride gas. These fugitive losses comprise the primary source of vinyl chloride in the work atmosphere of today's plants. Over the years, the trend has been to larger size vessels from the original capacity of 1100 gal to about 5000 gal. Newer designs are several times this size, resulting in a great reduction in the number of potential fugitive leak sources. The polymer process is batch-type and, after each reaction is completed, the vessel in which it is conducted requires varying kinds of purging, entering, cleaning, and preparation before the next batch can be started.

Originally, vessels were cleaned manually after each charge. Over the years, technical advances in polymerizer design reduced buildup and, consequently, the manual cleaning time required. In the later 1960's, hydraulic reactor cleaning was developed. This is a programmed high-pressure water mechanism which is inserted into a polymerizer to remove buildup almost completely. This has greatly reduced human entry into polymerizers for manual cleaning. On some products, human entry has been reduced to as few as 3% of the batches. On some products, entry is still required after every batch. Over the total product mix, entry is required in about 10% of the batches. The ultimate goal is to eliminate human entry.

Concurrent with the evolution of polymerizer design and mechanized cleaning, additional equipment was installed to improve the removal of vinyl chloride from the reactor prior to entry for cleaning. With current multistep procedure, vinyl chloride levels in open polymerizers have been reduced to the ambient level in the buildings today. The worker is further protected from vinyl chloride release from PVS resin buildup by use of an air line-supplied respirator during the cleaning operation.

Other losses are identifiable and occur in the processes inherent in today's plants. Among these are losses in the VCM recovery system, the drying operation, as well as monomer trapped in the polymer itself. Technological improvements, requiring time for research and development followed by procurement of equipment and installation, can reduce these losses.

The introduction of monitoring systems in all polymerization buildings has enabled us to reduce, significantly, the amount of VCM in the work atmosphere.

These systems consist of: a fixed organic vapor analyzer with multipoint remote sampling capability for sequential continuous monitoring (audible and visual alarms alert personnel when VCM excursions exceed 25 ppm so that respiratory equipment may be donned to seek and correct the source of the problem; portable organic vapor analyzers for rapid survey analysis and leak detection; and personal monitoring to evaluate the fixed station system in determining employee exposure.

Hundreds of readings are taken daily with values currently averaging 6 ppm in contrast to readings of about 35–40 ppm in early 1974. Excursions above 25 ppm still occur, but less frequently. During these excursions, or when there is a risk of such excursion, workers are required to wear respiratory protection.

Leak reduction has been the greatest source of reduced vinyl chloride levels. Constant monitoring around the clock has enabled this to be done. The fixed organic vapor analyzer shows a higher reading if there is a significant leak anywhere in an area. The leak is tracked down with the portable organic vapor analyzer and repaired.

The organic vapor analyzers operate on the basis of flame ionization and measure total hydrocarbon. Instruments are direct reading and provide instantaneous results. They can be used effectively in a vinyl chloride polymerization plant because there are practically no other hydrocarbons present. Personal monitoring is

accomplished by a worker wearing a small pump and gas collection tube containing activated carbon for periods of 2–4 hr. The samples collected are analyzed for VCM in a gas chromatograph and a time-weighted average is determined.

Other Methods of Manufacture

Other methods of manufacture of PVC differ in some respects but most of the process is similar.

The emulsion process is a modification of suspension polymerization in that different emulsifiers are used in slightly greater quantities. Particle size is much smaller for the dispersion resins made this way, 1–2 μm compared to 130–150 μm for the usual suspension resin. The emulsion or slurry is spray-dried because of this small particle size. Otherwise, the process is similar. Some emulsion resins are supplied as water systems or latexes. Manufacture is similar except for the drying stage.

In the mass process, water is not used. Monomer and catalyst are fed into a reactor where the polymerization proceeds to produce a free-flowing powder. When polymerization is completed, unreacted monomer is removed from the reactor by withdrawing it by vacuum, compressing and condensing the vinyl chloride under pressure; the monomer is then recycled to the process. The granular polymer is then conveyed with air to a series of screens and grinders where the product is ground and classified before being transferred to storage, compounding, or bagging. Like the previous processes, this is also a batch process.

The highly valued properties inherent in PVC have prompted the development of different methods of manufacture to provide various types of resins. Such variations usually make the polymer adaptable to different kinds of processing. For instance, suspension resins are widely used in extrusion, molding, and calendering but are not suitable for coating, dipping, or low-pressure molding, which require dispersion resins made by the emulsion process. Other applications require PVC in a stable water system or latex. The result is a host of PVC resins from the submicron size of the latexes to the normal 130–150 μm range of suspension resins. The individual particle may be a small, smooth sphere in the case of dispersion resins or have a highly porous, irregular configuration specifically designed for plasticizer absorption in flexible applications. A small or porous particle releases residual vinyl chloride monomer more readily than the large less porous types. Thus, approaches to minimizing the amount of a VCM remaining in the resin involve the physical structure of the PVC resin particle as well as the development and installation of equipment in the process itself.

Despite the similarities in the various methods of batch polymerization of VCM, the multiplicity of resins produced involve differences in manufacture which result in a much more complex operation than a simple flow sheet indicates. Perhaps this explanation will lead to a better understanding of the current PVC industrial process which has evolved from continuously changing technology over the years. New technology will bring further improvements, with 100% of today's efforts directed toward minimizing vinyl chloride levels in the work environment, the atmosphere, and the resin.