Environmental Health Perspectives
Vol. 12, pp. 1–7, 1975

Heavy Metal Contamination from Geothermal Sources

by J. Eleonora Sabadell* and Robert C. Axtmann*

Liquid-dominated hydrothermal reservoirs, which contain saline fluids at high temperatures and pressures, have a significant potential for contamination of the environment by heavy metals. The design of the power conversion cycle in a liquid-dominated geothermal plant is a key factor in determining the impact of the installation. Reinjection of the fluid into the reservoir minimizes heavy metal effluents but is routinely practiced at few installations. Binary power cycles with reinjection would provide even cleaner systems but are not yet ready for commercial application. Vapor-dominated systems, which contain superheated steam, have less potential for contamination but are relatively uncommon.

Field data on heavy metal effluents from geothermal plants are sparse and confounded by contributions from "natural" sources such as geysers and hot springs which often exist nearby. Insofar as geothermal power supplies are destined to multiply, much work is required on their environmental effects including those caused by heavy metals.

Introduction

In the burgeoning development of alternative modes for energy conversion and production, it is vital to make environmental impact assessments *a priori*. Such a procedure can have a salubrious, positive feedback effect on a new technology by helping to direct its development in environmentally sound directions.

In the case of geothermal power—an infant technology, barely accounting for 1000 MW(e) worldwide—there is still time. Pollution by trace heavy metals from geothermal sources has a high probability, yet field measurements up to this point have been scant at best.

This article includes a general description of geothermal sources; an outline of the power production systems, both current and proposed; a presentation of the available data on heavy metal ion concentrations in the effluents from power plants, exploratory drillholes and natural hot springs; and recommendations for the research needed to achieve a better understanding of this particular environmental problem.

*Department of Chemical Engineering and Center for Environmental Studies, Princeton University, Princeton, N. J. 08540.

Geothermal Sources

Volcanic eruptions, seismic activity, geysers, hot springs and fumaroles are some of the manifestations that signal the proximity of magma to the surface of the lithosphere. The earth's normal thermal gradient is about 30-40°C/km depth below the surface. Near volcanic areas or high concentrations of radioactive isotopes (*1*), the gradient may be as high as 150-200°C/km. If underground water is present in such areas, hydrothermal systems will result.

Convective heat transfer from the magma heats the water which, in turn, transfers heat via convective flow (Fig. 1). When the circulating hot fluid reaches the surface (or can be extracted after drilling), it may be used for district heating, industrial purposes or—as in the case at main issue here—for producing electricity.

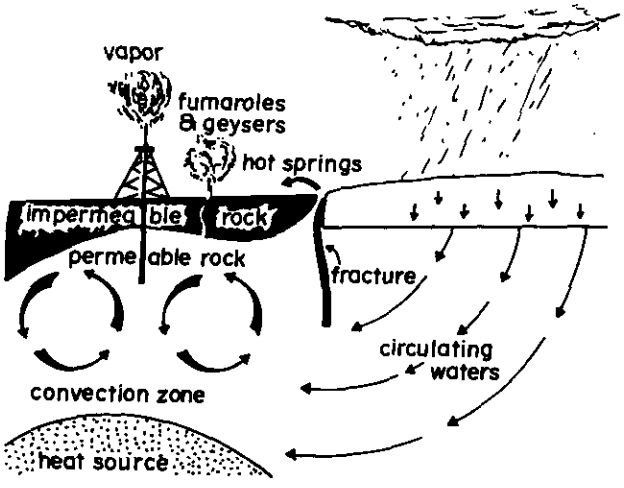

FIGURE 1. Diagram of a geothermal field.

The areas where geothermal sources are located belong to the circum-Pacific Belt, the Mediterranean-Tethyean Belt and the mid-Atlantic rift islands (*2a*). Nations that have operating geothermal power plants include the U.S., Italy, New Zealand, U.S.S.R., Iceland, Japan, and Mexico. The current capacities of these installations, along with projected increments in power through 1980, are given in Table 1 (*2b*).

Table 1. Installed and projected capacities of geothermal power plants.

Country	Installed capacity, MW(e)	Projected increments by 1980, MW(e)
Italy	390	15% possible
Iceland	3	Up to 32
Japan	33	Perhaps 145
Mexico	75	Up to 150
New Zealand	170	Up to 370
USSR	6	Up to 38
USA	500	Up to 1600

Geothermal exploration activity is underway in Africa (Ethiopia, Kenya, Katanga, and Algeria); Central and South America (Martinique, Nicaragua, El Salvador, Guatemala, Chile, Colombia, Venezuela); Europe (France, Spain, Switzerland); Asia (Turkey, Israel, India, China); and the Pacific (Philippines, Indonesia, Taiwan). Within the U.S., exploration is proceeding in the Imperial Valley of California, in the Valles Caldera of New Mexico, and various sites in Nevada, Utah, Idaho, Oregon, and Hawaii.

Estimates of future worldwide generating capacity are fraught with uncertainty, but a conservative one predicts 20,000 MW(e) by the end of the 1980's. While the emphasis of this article is on electrical generation, at least one source claims that more geothermal energy is currently used in non-electrical applications such as district heating, crop-drying, and industrial processing (J. Barnea, private communication, 1975). Several western states including Oregon, California, Idaho, and Nevada so utilize geothermal energy.

Power Plant Design

Hydrothermal reservoirs that are suitable for electric power production have been classified as either vapor-dominated or liquid-dominated (*3*). The fields at Larderello, Italy, and The Geysers, California typify the former category which produces dry, superheated steam. Nearly all other fields that are under exploitation are of the liquid-dominated variety in which hot water under pressure flashes to steam either underground or at the well-head. Indeed, it has been estimated that about 95% of the world's hydrothermal resources are of this type, despite the fact that it currently accounts for less than 25% of the generating capacity.

With rare exception, extant geothermal power plants utilize very similar equipment which is illustrated schematically in Figure 2. This system has definite limitations, including the large size and high cost of the turbine required and the need for multistage flash units to extract the maximum amount of energy. Other methods under development include the total flow system, the simple binary cycle, and the regenerative binary cycle (*4*). In the total flow system, the steam-water mixture that emerges from the wells is fed directly to a turboexpander. The binary systems employ a secondary working fluid (e.g., isobutane, ammonia, or a fluorocarbon) which is vaporized at supercritical pressure via a heat exchanger in contact with the hot geothermal brine. When the secondary fluid expands it drives a turbogenerator, as shown in Figure 3.

Both vapor- and liquid-dominated fields contain noncondensable gases such as CO_2, H_2S, H_2, N_2, and low molecular weight hydrocarbons with occasional traces of HCl, NH_3, H_3BO_3, Ar, etc. To date, these have been discharged directly to the environment—either to the atmosphere via gas ejectors at

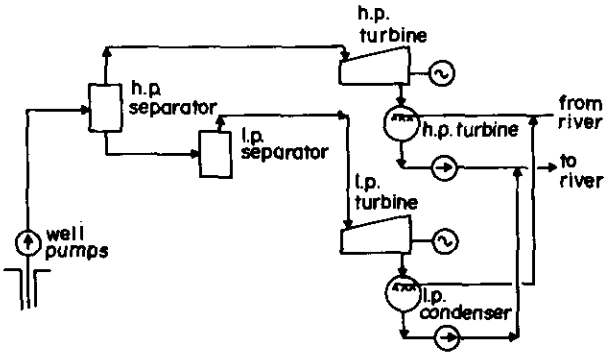

FIGURE 2. Flashed steam system.

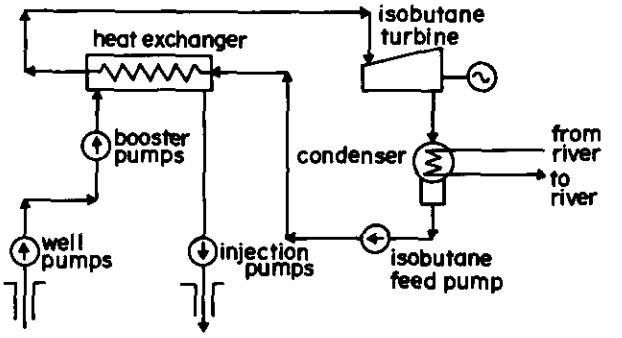

FIGURE 3. Simple binary system.

the turbine condensers, via the cooling water effluent, or both at the same time (5). Only liquid-dominated fields, however, produce briny wastewater effluents. For a variety of reasons—including the mitigation of ground subsidence, the replenishment of the reservoir mass and enthalpy and, most importantly, the prevention of contamination of the environment—reinjection of the waste water into the reservoir would be desirable. Although reinjection tests have been made at El Salvador (6) and are planned for the Broadlands field in New Zealand, only the relatively small installation at the Otake field in Japan routinely reinjects briny fluid (7). It should, perhaps, be mentioned that reinjection is routine also at The Geysers and has been tested at Larderello, but both of these fields are vapor-dominated, and the reinjected fluid poses no threat to the aquifier—say, from precipitation of amorphous silica (8).

Chemical Content of Hydrothermal Fluids

The origin of chemical components in hydrothermal fluids remains controversial (9), but in general it is accepted that the solutes present in hot natural waters (with temperatures ranging from 100 to 340°C) are temperature- and pressure-dependent and relate to the composition of rocks of the geological system. The salt content of such waters ranges from 30 to 300,000 ppm, and the geochemical conditions determine the relative acidity. The manganese, iron, and arsenic contents of thermal waters from springs and drillholes at different locations are given in Table 2. The solubilities (including complex formation) of the ions in the system are determined by the pressure and temperature with

Table 2. Composition of thermal waters from springs and drillholes.[a]

Source	Approx. temp., °C	pH (20°C)	Concentration in discharge, ppm[b]		
			Mn	Fe	As
Iceland	216	9.6	0.0	0.1	—
Ngawha, N.Z.	230	7.4	0.02	0.1	—
Broadlands, N.Z.	260	8.3	0.009	0.25	8.1
Wairakei, N.Z.	250	8.3	0.015	0.05	4.5
Taiwan	200	3.2	—	1368	—
Japan	~300	4.9	—	508	—
Mexico	340	—	—	0.2	—
California	340	4.7	1400	2290	12

[a]Data of Ellis (9).
[b]For water collected at atmospheric pressure from discharges.

the exception of Cl, B, and Cs, which are totally soluble in most cases.

Table 3 presents some of the analyses of 135 samples from thermal waters in Iceland (*10*); Ga, Ge, Fe^{2+}, Mo, Ti, and V were found in most samples, whereas Cr, Co, Ni, and Zn appeared in only few; Pb was almost absent, and Bi, Cd, and Cu were not found at all. The relationship of the trace element composition to the geochemistry of the system is apparent, e.g., Zn, Ni, Co appear mostly in acidic waters; Mo is found in alkaline and neutral waters; the silica and calcium contents of the thermal waters appear to be related to the presence of germanium. Solubilities depend on the temperature and pressures. In the analysis of some acidic effluents of several wells in the fumarolic area of the Owakidani Valley in Japan, high concentrations of metals were found (*11*): e.g., 4000 ppm of magnesium, 3770 ppm of iron, 7140 ppm of aluminum, and 1340 ppm of manganese.

Table 3. Trace elements in thermal waters in Iceland.[a]

Element	Element concn in thermal waters, ppm			
	Sample 300[b]	Sample 351[b]	Sample 223[b]	Sample 317[b]
Cr	<2.0	<2.0	<2.0	<2.0
Co	<1.0	<1.0	<1.0	<1.0
Ga	3.6	11.8	1.5	3.0
Ge	3.0	38.0	23.6	6.0
Fe	6.5	3240.0	12.5	194.0
Mo	21.0	9.1	47.5	11.5
Ni	<1.0	<1.0	<1.0	<1.0
Ti	0.7	3.0	1.0	8.8
V	1.4	<0.5	15.1	?
Zn	<2.0	<2.0	<2.0	<2.0

[a]Data of Arnorsson (*10*).
[b]Samples: sample 300, alkaline water from a low temperature area; sample 351, low temperature area with carbonate thermal springs; sample 223, alkaline water from a high temperature area; sample 317, thermal brine.

In Table 4 the compositions of brines from drillholes in the Imperial Valley, California, and Cerro Prieto, Mexico, are given. The total dissolved salt content in the Mexican well is approximately that of sea water but the brines in the Salton Sea area are extremely abundant in dissolved minerals, presenting formidable corrosion problems. Experience has been gained in the exploitation of other, less corrosive sources, such as that at Wairakei, New Zealand, and at Matzukawa, Japan (*12*).

An environmental impact analysis of the Wairakei Power plant in New Zealand conducted in early 1974 (*13*) describes a number of problem areas including the plant's contribution to the mercury contamination of the Waikato River and the presence of arsenic in the waste waters. Because of the extensive geochemical and geophysical characterization of the Taupo volcanic zone in New Zealand, an appreciable amount of information is available. Of particular interest here are the measurements made on silica precipitates from hot springs and drillhole discharges as given in Table 5

Table 4. Compositions of some brines.[a]

Constituent	Constituent concn, ppm		
	Sea water	California Imperial Valley, IID No. 2	Mexico Cerro Prieto
Sodium	10,710	53,000	5,610
Potassium	390	16,500	1,040
Lithium	—	210	13.6
Barium	—	250	57
Calcium	419	28,800	320.4
Aluminum	—	—	—
Strontium	—	440	27.4
Magnesium	1,300	10	—
Boron	—	390	12.4
Silica	—	400	—
Iron	—	2,000	—
Manganese	—	1,370	—
Lead	—	80	—
Zinc	—	500	—
Copper	—	3	0.09
Rubidium	—	70	—
Sulfur	—	30	10
Cesium	—	20	—
Chloride	19,350	155,000	9,694
Fluorine	—	—	0.88
CO_2	—	500	—
HCO_3	150	—	—
SO_4	2,690	—	—
Total dissolved salts	35,000	259,000	17,000

[a]Data of Banning and Oden (*12*).

Table 5. Metals in New Zealand hot spring and drillhole discharge precipitates.[a]

Element	Metal concn, ppm[b]			
	Champagne Pool	Rotokawa Hole #2	Ohaki Pool, Broadlands	Broadlands Hole #2
Au	80	70	85	55
Ag	175	30	500	200
As	2%	0.4%	400	250
Sb	2%	~ 30 %	~ 10%	~ 8%
Hg	170	15	2000	~ 200
Tl	320	0.5%	630	~1000
Pb	15	50	25	50
Zn	50	100	70	200
W	—	< 10	—	—

[a]Data of Weissberg (*14*).
[b]Concentrations in ppm unless indicated as %.

Table 6. Geothermal mercury pollution in the Waikato hydrosystem and in Lake Rotorua.[a]

Mercury concn in top 30 cm of sediments, mg Hg/kg of sediment[b]		Hg concn in top 30 cm of sediment, mg/kg[b]				
		Lake Taupo	Upper Waikato	Lake Maraetai	Lower Waikato	Lake Rotorua
Arithmetic mean	$\bar{x}$	<0.05	0.62	0.89	1.13	1.18
Range	r		0.05-213	0.45-1.43	0.30-1.97	0.57-2.40
Standard deviation	σ		0.38	0.26	0.49	0.57
No. in sample	n		69	13	9	20

[a]Data of Weissberg and Zobel (*15*).
[b]Dry weight basis of −0.125 mm fraction.

(*14*). These gold-silver, ore-grade materials resulted from high discharge rates of natural dilute brines that flowed for long times over precipitated amorphous silica.

From these data it can be seen that As, Sb, Hg, Tl, Ag, and Au are present in substantial concentrations, possibly because silica acts as an ion exchanger. Comparing the gold and silver contents of discharge water from Broadlands with that of sea water, a factor of ten and two, respectively, is found. The enrichment factor seems to be the coprecipitation of Au, Ag, and Tl with SbS, which acts as a collecting agent. Copper, lead, and zinc are present in much lower concentrations in these brines and precipitates, and a possible explanation is that these metals are precipitated below the presently explored depths (from 50 to 1200 m) by a different mechanism from the one occurring at the surface.

In a study of the mercury contamination of the Waikato River hydrosystem from a pulp and paper mill that discharges wastewaters into Lake Maraetai located halfway down the Waikato River, very interesting results were found (*15*). Samples of waters, sediments, and axial muscle tissue of trout living in the area were taken not only from the Waikato River below the mill, but also from the Upper Waikato where the Wairakei and the Broadlands thermal areas are situated. Samples from the Rotorua Lake region, another geothermal area, were taken also; the results are presented in Table 6. On comparing these measurements with the normal mercury content of sediments (from 0.1 to 0.5 ppm) and of trout (ranging up to 0.2 mg/kg of fish), it is evident that the contribution to mercury pollution of the thermal areas is substantial. In Lake Aratiatia, immediately downstream from the Wairakei Plant, there have been two large kills of carp, and evidence has been found of a lower diversity of individual species at different levels in the biota than exists at other lakes further down the Waikato River (*16*). Thermal pollution must also be taken into account because it magnifies the inherent toxicity of trace heavy metals (*17*).

Elsewhere we have suggested that contamination of the troposphere by the noncondensable gases enumerated above may present both local and global problems (*16*). Several recent reports indicate that mercury vapor from geothermal sources may also be problematical. Tables 7 and 8 present some mercury analyses from air samples over fumarolic and volcanic regions (*17, 18*). To place the numbers in perspective, consider that U.S. regulations constrain mining and other mercury-related activities from contributing more than 1 $\mu g/m^3$ (averaged over 30 days) to ambient air levels (*18*).

The data in Tables 7 and 8 may or may not be indicative of ambient air mercury levels at geothermal locations. So far as we are aware, the only known mercury analysis for a geothermal fluid is that for the Wairakei field—0.15 ppb (*16*). A comparison of the total mercury effluent rate from the

Table 7. Mercury in air and gases, volcanic regions.[a]

Sample	Hg concn × 10^3	
	$\mu g/m^3$	(ppb)
Air, Honolulu, Hawaii	40–910	(0.03–1.4)
Air, Kilauea Volcano	21400–23300	(16.5–18.0)
Gases, volcanoes, U.S.S.R.	300–4000	
Gases, hot springs, U.S.S.R.	10000–18000	

[a]Data of Fleisher (*17*).

Table 8. Mercury in air at Icelandic and Hawaiian thermal and volcanic sites.[a]

Location	No. of areas sampled	No. of samples	Mercury level, $\mu g/m^3$ Range	Mean ± S.E.
Iceland				
Fumarolic	5	16	1.3 −37.0	10.0 ± 5.2
Magmatic	1	3	4.8 − 7.6	6.1 ± 0.6
Nonthermal	2	3	0.62− 1.0	0.8 ± 0.2
Hawaii				
Fumarolic	1	21	1.0 −40.7	17.6 ± 6.1
Magmatic	2	13	0.7 −40.5	17.1 ± 6.8
Nonthermal	3	10	0.04− 0.3	1.1 ± 0.5
New York	—	—	<0.014	<0.014
Palo Alto	—	—	<0.01	<0.01
General	—	—	0.003−0.030	<0.03

[a]Data of Siegel and Siegel (*18*).

Wairakei Plant with that from a coal plant with the same power output shows that this geothermal plant emits slightly more than 1% as much (Table 9). An important difference between the two types of installations, however, is that a coal plant's emissions cease when the plant shuts down, whereas a geothermal plant's emissions may continue and even increase during shutdown (*20*).

Such considerations emphasize the need for systematic monitoring programs for mercury and other trace heavy metals, as well as radioactive contaminants such as ^{222}Rn and its daughters (*8*). The monitoring should begin at the exploration stage, both before and after preoperational drilling and well-testing, and continue into the operational phase. Only in this way can the contribution of geothermal exploitation to environmental contamination be determined.

Table 9. Comparison of the mercury production in the Wairakei plant and a coal plant.

Wairakei plant	
Mercury production rate, tons/yr (g/yr)[a]	0.006 (6×10^3)
Total power output, kWh/yr	1.1×10^9
Mercury production vs. power production, g/kWh	5.4×10^{-6}
Coal plant with an equivalent power output	
Total power output, kWh/yr	1.1×10^9
Power output at 40% efficiency (burning 10 tons/day), kWh/day	24×10^4
Total carbon consumption tons/yr	4.56×10^5
Estimated mercury content in coal, ppm (g/ton)[b]	1 (1)
Total mercury production g/yr	4.52×10^5
Mercury production vs. power production, g/kWh	4.14×10^{-4}

[a]Data of R. C. Axtmann (*16*).
[b]Data of Joensuu (*19*).

REFERENCES

1. Barnes, H. L. Applied hydrothermal geochemistry. In: Proceedings of International Conference on High Temperature and High Pressure Electrochemistry in Aqueous Solutions, National Association of Corrosion Engineers USA, University of Surrey, England, Jan. 1973.
2. Kruger, P., and Otte, C. Geothermal Energy. Stanford Univ. Press, Stanford, Calif. 1973, (a), pp. 69-94; (*b*) p. 56.
3. White, D. E., Muffler, L. J. P., and Truesdell, A. H., Vapor-dominated hydrothermal systems compared with hot-water systems. Econ Geol., 66: 75 (1971).
4. Witmer, F. P., Jr. Choose your cycle to suit your well. Geothermal World Directory, 1974. Geothermal Energy 3:27 (1975).
5. Pacific Gas and Electric Co. Environmental data statement—Geysers unit 14. July 1973.
6. Barnea, J. Geothermal power. Sci. American, 226: 70 (1972).
7. Japan Geothermal Energy Association. Geothermics 3: 122 (1974).
8. Axtmann, R. C. Chemical aspects of the environmental impact of geothermal power. Proceedings 2nd U.N. Symposium on Development and Use of Geothermal Resources, May 1975, in press.
9. Ellis, A. J. Quantitative interpretation of chemical characteristics of hydrothermal systems. Geothermics (Spec. Issue) 2: 516 (1970).
10. Arnorsson, S. The distribution of some trace elements in thermal waters in Iceland. Geothermics 2: 542 (1970).
11. Noguchi, K., et al. A geochemical investigation of strong acid water from bored wells in Hakone, Japan. Geothermics 2: 561 (1970).
12. Banning, L. H., and Oden, L. L. Corrosion Resistance of Metals in Hot Brines: A Literature Review. Bureau of Mines, U.S. Department of Interior, IC8601 (1973).
13. Axtmann, R. C. An environmental study of the Wairakei power plant. PEL Report 445, New Zealand Department of Scientific & Industrial Research, 1974.
14. Weissberg, B. G. Gold-silver ore-grade precipitates from New Zealand thermal waters. Econ. Geology, 64: 95 (1969).
15. Weissberg, B. G., and Zobel, M. G. R. Geothermal Hg pollution in New Zealand. Bull. Environ. Contam. Toxicol. 9: No. 3, 148 (1973).
16. Axtmann, R. C. Environmental impact of a geothermal power plant. Science, 187: 795 (1975).

17. Fleisher, M. Cycling and control of metals. PB216-184, NTIS, 1973, p. 3.

18. Siegel, S. M. and Siegel, B. Z. Geothermal hazards—Mercury emissions. Environ. Sci. Technol. 9: No. 5, 473 (1975).

19. Joensuu, O. I. Fossil fuels as source of mercury pollution. Science 172: 1027 (1971).

20. Axtmann, R. C. Emission control of gas effluents from geothermal power plants. Environ. Letters 8: No. 2, 135 (1975).