Environmental Health Perspectives
Vol. 14, pp. 201–206, 1976

Coal Hydrogenation and Environmental Health

by R. A. Wadden*

Planning of coal hydrogenation processes, such as liquifaction and gasification, requires consideration of public health implications. Commercial plants will require coal quantities ≥ 20,000 tons/day and the large size of these plants calls for careful consideration of the potential health hazards from the wastes and products of such processes. Analysis of pollution potential can roughly be divided into three categories: raw material structure and constituents, process design, and mode of plant operation. Identifiable pollutants include hydrogen cyanide, phenols, cresols, carbonyl and hydrogen sulfides, ammonia, mercaptans, thiocyanides, aniline, arsenic, trace metals and various polycyclic hydrocarbons.

One study of workers in a hydrogenation process has revealed an incidence of skin cancer 16–37 times that expected in the chemical industry. In addition, a number of high boiling point liquid products were identified as being carcinogenic, and air concentrations of benzo[a]pyrene up to 18,000 μg/1000 m³ were reported. Health statistics on occupational groups in other coal conversion industries have shown significantly higher lung cancer rates, relative to groups without such occupational exposures. These data suggest that coal hydrogenation plants must be carefully planned and controlled to avoid harm to environmentally and occupationally exposed populations.

Introduction

The conversion of coal to desirable solid, liquid, or gaseous products, or to usable energy, is an important aspect of an industrialized society. Because of the demand for low-sulfur, environmentally acceptable fuels, coal liquefaction and gasification are of particular interest at the present time. The possible health consequences of exposure of humans to the wastes of such processes depend, of course, on the types of wastes generated and released. At the present time, no commercial scale liquefaction or gasification plants exist in the United States. However, a number of major installations are far advanced into the planning stage (*1–3*). Estimates of total populations who might be associated with these plants, including workers, dependents, and service personnel, vary from 5000 to 16,000 (*1,4*). The potential health implications of coal processing plants to these people, and to those who might be affected by water and/or air transport over greater distances, need to be considered at the very outset of planning.

*University of Illinois School of Public Health, Chicago, Illinois 60680.

Some large-scale liquefaction and gasification facilities exist elsewhere in the world (*5–7*). However, environmental measurements around such plants, if they exist at all, are not readily available. It is also likely that any coal conversion plants constructed in the U.S. will be considerably different than those already in existence. Consequently, analysis of the pollution potential of coal processing currently depends on the evaluation of data collected from pilot plant processes and bench scale reactors. Although this type of consideration is the only one presently available, it is well to point out that many pollution problems will become evident only after a facility has operated continuously for a period of weeks or months. The discussion which follows is an attempt, based on data presently at hand, to identify some of the environmental and occupational hazards which might be anticipated.

Process and Raw Material Evaluation

Commercially feasible liquefaction and gasification plant sizes will typically reduce in excess of

20,000 tons/day of coal to products and wastes (*1,8,9*). This quantity of coal is roughly equivalent to that fed to 3–700 MW electrical power plants. These conversions ordinarily require addition of hydrogen to the coal to produce saleable materials and can be generally classified as hydrogenation processes. Because of the large amounts of material being processed, the potential exists for environmental discharge of considerable quantities of hazardous materials. These include hydrogen cyanide, phenols, cresols, carbonyl and hydrogen sulfides, ammonia, mercaptans, thiocyanides, aniline, arsenic, trace metals, and various polycyclic hydrocarbons (*10–17*).

Sources of possible pollution from hydrogenation plants can generally be identified with three categories: the nature of the raw material, the design of the processing scheme, and the way in which the process is actually operated. Coal has a very complex, heterocyclic structure, which must be broken down to produce desirable products (see Fig. 1). A given coal conversion process will destroy many of these bonds. Thiophene, methylpyridine, hydroxynaphthalene and benzo[a]pyrene are only a few of the compounds which could reasonably be expected to be produced. However, the cleavage of these cyclic linkages, and the chemical form of the resultant compounds, are difficult to analyze and predict. As is indicated in Tables 1 (*19,20*) and 2 (*21*), coal also contains significant quantities of hazardous metals and considerable amounts of sulfur and nitrogen. For example, arsenic, beryllium, mercury, lead, and vanadium have all been identified as materials with properties toxic to man (*22*). All such materials must be contained in an environmentally acceptable way.

Many different coal hydrogenation processes have been attempted or projected (*23*). Each needs to be analyzed specifically for the types of wastes produced and how they are distributed to water, air, and soil. However, some general observations can be made about the nature of the conversion process. Most hydrogenation processes require energy addition at elevated temperatures and pressures in order to break down the coal. Table 3 indicates the atomic H/C ratios of various raw

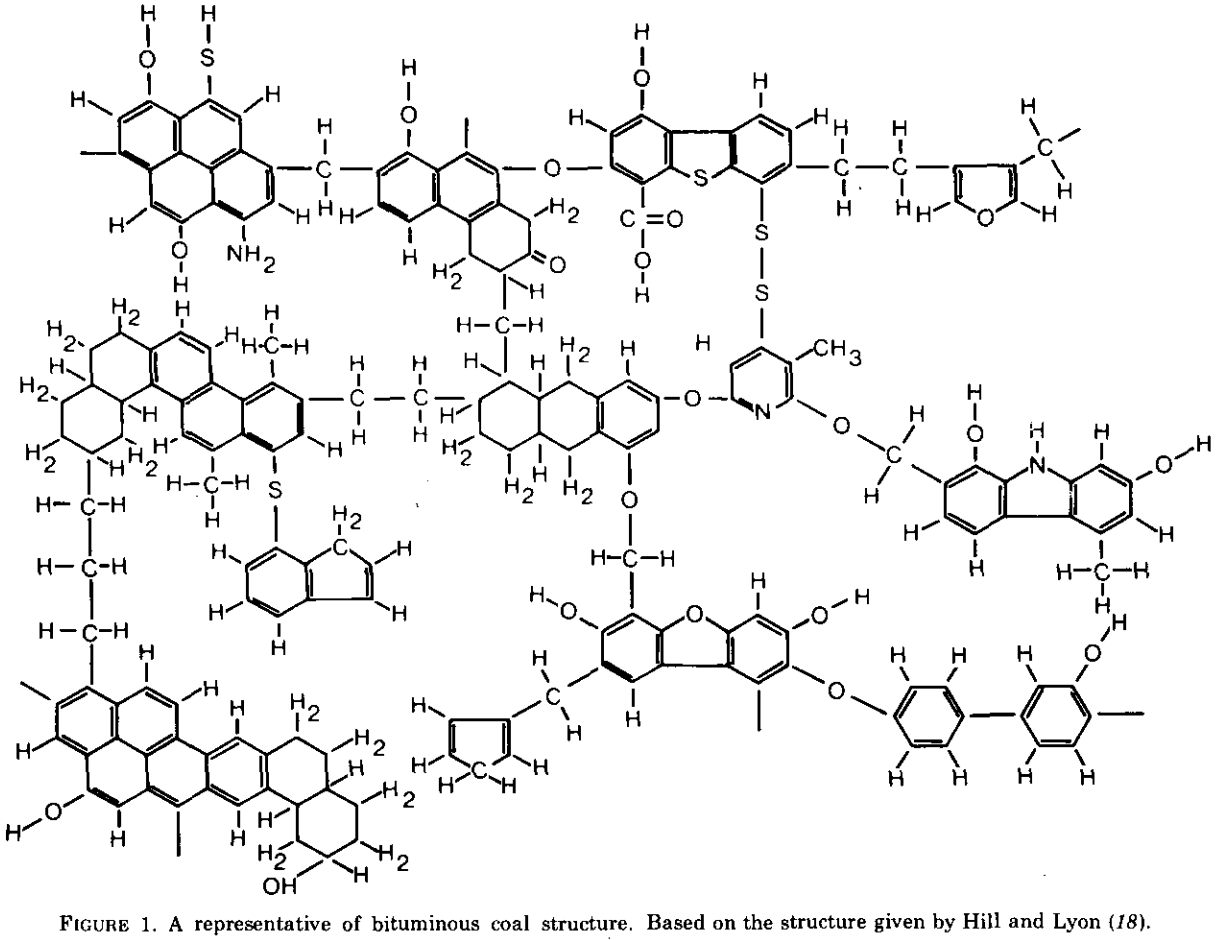

FIGURE 1. A representative of bituminous coal structure. Based on the structure given by Hill and Lyon (*18*).

Table 1. Some trace elements in coal and coal gasifier gas.

Element	Concentration, lb of trace element/1000 tons of coal	
	Coal[a]	Coal gasifier gas[b]
As	28.0	27.7
B	204	97.3
Be	3.2	0.1
Cd	5.0	
Co	19.1	
Cr	27.5	
Cu	30.3	
F	122.	121.
Hg	0.4	0.4
Mn	98.8	6.8
Mo	15.1	13.7
Ni	42.1	
Pb	69.6	25.2
Sb	2.5	1.9
Se	4.2	
Sn	9.6	
V	65.4	
Zr	145.	

[a]Data of Ruch et al (*19*).
[b]Calculated from data of Sather et al. (*20*).

Table 2. Chemical analysis of typical Illinois No. 6 coal.[a]

	Concentration, tons/1000 tons dry coal
Carbon	707
Hydrogen	54
Nitrogen	10
Sulfur	50
Oxygen	80
Ash	99

[a]Data of Helfinstine et al. (*21*).

Table 3. Hydrogen/carbon atomic ratios in typical fuels.

Fuel	Atomic ratio H/C
Coal (Illinois No. 6)	0.86
Heating oil	
Residual (No. 6)	1.55
Distillate (No. 2)	1.79
Naphtha	2.20
LPG	2.65
Natural gas	3.40
Pure methane	4.00

materials and finished products. The necessary energy is ordinarily derived from oxidizing a portion of the incoming coal. Hydrogen is supplied either through direct or indirect utilization of the hydrogen atoms in water or through use of a hydrogen donor solvent. Net water usage for process purposes has been estimated at $1-10 \times 10^6$ gal/day for a 20,000 ton/day plant (*1,4,8*). This volume does not include cooling water requirements which may be ten times as large.

Figure 2 shows a generalized flow sheet combining a number of processing schemes. The intent of the flow sheet is to emphasize the elements common to most hydrogenation processes. Each particular process is considerably more complex and requires careful analysis of its products and wastes.

Catalytic hydrogenation for liquid production takes places at 700–1000°F and 100–200 atm. One such process, presently in the pilot plant stage, requires that dry pulverized coal feed be mixed with recycle oil to form a slurry. The slurry is subsequently contacted with hydrogen over an ebullating catalyst bed (cobalt molybdate) at about 850°F and 180 atm. The hydrocarbon product gas, rich in hydrogen, but also containing significant concentrations of H_2S and NH_3, is cleaned, and the hydrogen is removed and recycled to the reaction step. The liquid products are flashed at 1 atm to provide a light distillate product. The residue is subsequently vacuum-distilled to produce a heavy distillate (often recycled to form the slurry) and a high molecular weight bottoms product which may be burned as fuel. Operating conditions can be altered to produce different product ratios of gas/liquid (*24*). A similar process uses a turbulent flow, fixed-bed reactor of pelletized cobalt molybdate on silica-activated alumina (*25*).

Use of a hydrogen-donor solvent (usually derived from the coal) sometimes replaces the direct addition of hydrogen. A slurry, which contains about 90% of the carbon in the feed coal, is again formed in the dissolution step (815°F/65 atm). This product is filtered to remove undissolved solids. A subsequent series of distillation steps yield light liquids for hydrotreating, product gases, process solvent for recycling and a solvent-refined solid coal product in the bottoms. Further hydrocracking and hydrotreating of the solvent-refined coal may be carried out to produce a greater yield of lower boiling distillates (*23,26*).

Pyrolysis, the thermal destruction of the coal structure, is also used to produce coal liquids. One pilot plant process heats pulverized coal in four successive fluidized bed reactors (600, 850, 1000, and 1500°F) at pressures <2 atm. Gases released from the second stage are water-quenched to produce a heavy oil. Further hydrotreatment in a catalytic reactor at 750°F and 100–200 atm removes sulfur, nitrogen, and oxygen (*8,23,27*).

Destructive hydrogenation procedures leading to gaseous products are designed for 700–2700°F and 10–100 atm (*23*). Depending on the required

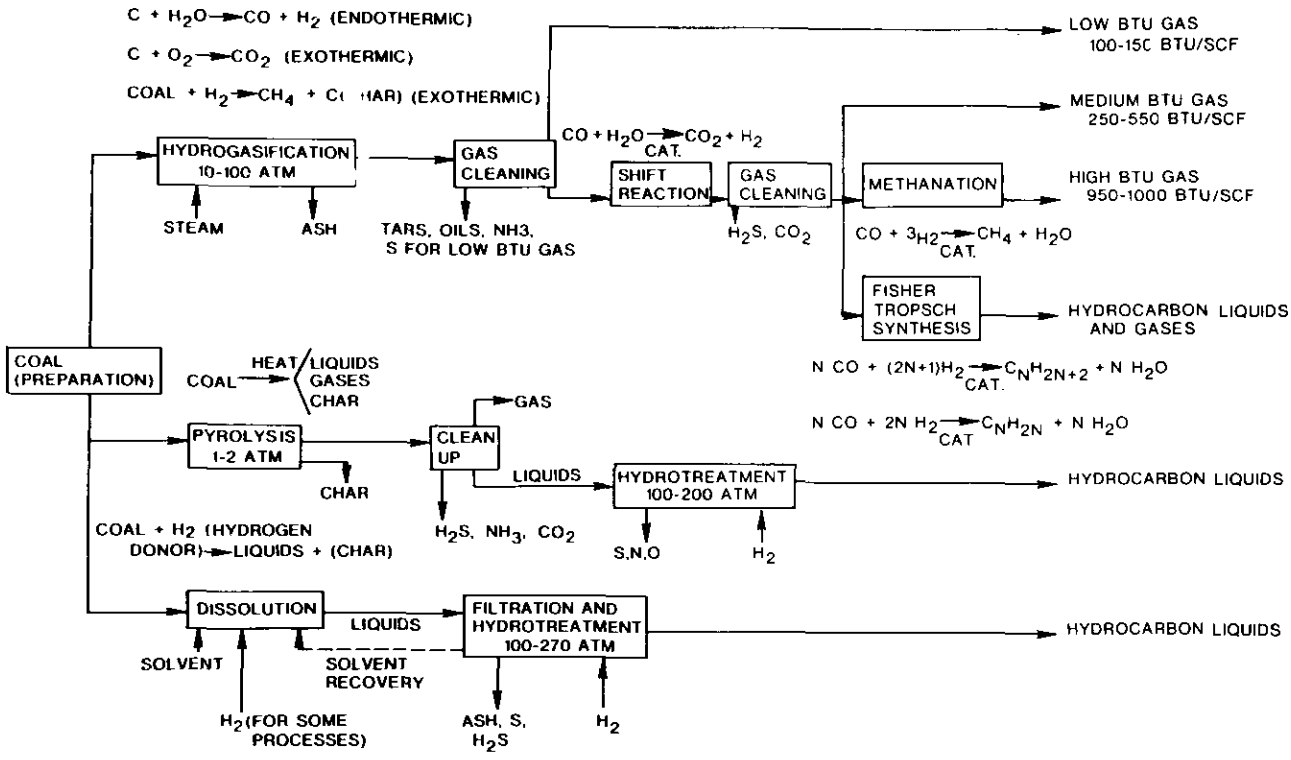

FIGURE 2. General processing steps: Gas and liquid from coal.

heating value of the product gas a shift reaction step and/or methanation may be required (Fig. 2). In general, the reaction conditions for gasification are somewhat more severe than those for liquifaction, although the unit operations and processes are similar.

Heavy oil and tars produced by hydrogenation may comprise a quantity of 30,000–200,000 lb/1000 tons coal (*9,13*). At present, these materials are not completely characterized. A partial analysis of some of the constituents contained in the tar from a gasification pilot plant is shown in Table 4 (*15*). It has been suggested that the heavy oils can be used (and consequently controlled) by recycling them to the main hydrogenation reactor for further reduction and/or by using them to slurry the incoming coal (*2*). However, there are some data that suggest that the naphthalenic fraction of recycle streams is difficult to break down (*11*). There is also evidence that some higher molecular weight materials may not be completely degraded (*27,28*). In addition, product liquids may have higher aromatic contents than naturally occurring hydrocarbons with the same boiling point characteristics (*29*). Since many cyclic hydrocarbons have been identified as hazardous to man, the potential of these liquids for causing adverse effects on the central nervous system, liver, kidneys, and skin, as well as their possible carcinogenicity, needs to be analyzed.

If high BTU fuel gas is produced, it will probably have a higher hydrogen content (1–5%) than is presently common in the natural gas it will replace (*2,23*). Whether this higher hydrogen content will be significant in terms of hydrogen embrittlement of existing pipelines or a hazard in industrial and domestic applications, remains to be evaluated. Another undefined area is the effect exerted by the large amounts of CO_2 (> 16,000 tons/day) discharged from gasification processes (*1*).

Waste char and ash, which require disposal, amount to 20–30% of the raw coal (*1,2*). Some

Table 4. Some tar constituents in the Synthane coal-to-gas process.[a]

	Concentration, vol %
Naphthalene	11.6
Fluorenes	9.6
Three-ring aromatics	13.8
Phenols	4.0
N-Heterocyclics	10.8

[a]Data of Forney et al. (*15*).

phenolic material is likely to be disposed of with the waste ash and char and has the potential to be leached out into water systems (*17*). A variety of catalysts, including compounds containing iron, zinc, aluminum, copper, and cobalt, are used in coal hydrogenation (*30,31*). Perhaps of greatest concern are the types utilized for methanation in the gasification process. Nickel, Co, Fe, Ru, Pd, Os, and Pt have all been suggested as possible catalysts. The presence of nickel carbonyl (a suspected carcinogen) (*32*) has been reported in methanizer product gas (*5*). Since temperatures <525°F encourage the formation of $Ni(CO)_4$, and reduced conversion of CO to CH_4, careful temperature control is necessary for process as well as health reasons. In certain industrial settings, Pt and Pd have been implicated in the occurrence of an asthma-like disease, although their existence in the gas phase in significant concentrations is problematical (*33,34*). The items above represent potential environmental problems which need to be accounted for. Other similar possibilities may become evident as more attention is given to the details of design and operation.

Occupational Health Implications

Only one study of the actual health hazards of coal hydrogenation is presently available (*16,17,-28,35*). A group of 359 workers was examined for skin cancer over a period of 5 yr at a liquefaction plant designed to process 300 tons/day of incoming coal. Of this group, 10 men developed skin cancer. Exposure varied from several months to 23 yr, but all significant lesions were found in workers with less than 10 yr exposure. The reported incidence was 16–37 times the incidence of skin cancer expected in the chemical industry (*35*).

Analyses of the liquid materials produced in the plant identified a number of carcinogenic materials. An increase in carcinogenicity with increasing liquid boiling point, usually with respect to liquids with boiling points >260°C, was observed in laboratory animals (*28*). This relationship was particularly evident for the oil, produced in the plant, which was recycled to slurry the incoming coal. In addition, air measurements in working areas revealed benzo(a)pyrene concentrations often in excess of 50 μg/1000 m^3 with a peak value of 18,000 μg/1000 m^3 (*17*). Benzo[a]pyrene has been identified as being strongly carcinogenic (*36*). These concentrations are in contrast to typical urban levels of 3–6 μg/1000 m^3 (*36*).

Health statistics on occupational groups in other coal conversion operations, such as coke ovens and coal-tar processing, have shown significantly higher lung cancer rates, relative to groups without such occupational exposures (*36–39*). In particular, coke oven workers appear to have 2.5 times the incidence of lung cancer as other steel workers (*38*). The environment on top of a coke oven is, of course, different from that likely to occur in hydrogenation plants which process material continuously. There is no assurance that the same incidence of cancer or any other disease will occur. However, close control of environmental discharges is strongly suggested in light of these occupational observations and the hydrogenation plant data cited above. In addition to workers, severe exposure of population groups at high risk to water or air pollutants, such as children, asthmatics, and those with cardiopulmonary dysfunction, must also be avoided.

Conclusions

Most of the problems of control in hydrogenation plants are probably solvable, providing the nature and source of the pollution is properly described. In addition, low-sulfur, refined fuels produced by such processes are much more acceptable in urban areas than raw coal or heavy, high-sulfur oils. However, because of the large quantities and complex nature of the coal and the design and operating characteristics of the conversion process, there must be a recognition that these new types of operations may produce kinds of pollutants with which we are unfamiliar. A major effort is needed to further characterize the wastes and products of the hydrogenation process, particularly in terms of toxic materials which may appear in low concentrations. Quantitation of pollutant discharges requires long term operation of large scale pilot plants. (This is contrary to the way pilot plants are usually operated. Because of time and economic restrictions there is a tendency to change operating conditions frequently.). In addition, considerable effort should be expended to review and protect the occupational health of pilot plant workers.

Control of pollutants from an established technology is often difficult and costly. It is much more desirable to define hazards, and develop appropriate characterization and control methods, before a new technology is launched. Designers, operators, and regulators must be aware and alert to the potential problems of coal hydrogenation in order to properly protect the health of the worker and the public.

Acknowledgments

I thank Drs. A. H. Wolff and B. W. Carnow of the University of Illinois School of Public Health for their helpful comments and review of this paper.

REFERENCES

1. Battelle (Columbus Laboratories). Detailed environmental analysis concerning a proposed coal gasification plant for Transwestern Coal Gasification Company, Pacific Coal Gasification Company, Western Coal Gasification Company. Before Federal Power Commission, Washington, D. C., February 1, 1973.
2. Synthetic Gas-Coal Task Force. The Supply-Technical Advisory Task Force—Synthetic Gas-Coal. Prepared for Supply-Technical Advisory Committee, National Gas Survey, Federal Power Commission, Washington, D. C., April 1973.
3. Agosta, J., et al. Low B.t.u. gas for power station emission control. Chem. Eng. Progr. 69: 65 (1973).
4. Seay, J. G., et al. Evaluation of sites for an Illinois coal gasification industry. Illinois Institute for Environmental Quality, Chicago, May 1972.
5. Ricketts, T. S. Modern methods of gas manufacture including the Lurgi process. J. Inst. Fuel 37: 328 (1964).
6. Hoogendoorn, J. C. Gas from coal with Lurgi gasification at Sasol. In: Clean Fuels from Coal. Institute of Gas Technology Symposium, Chicago, September 10–14, 1973, pp. 111, 353.
7. Rudolph, P. F. H. The Lurgi process. The route to S.N.G. from coal. In: Proceedings of the Fourth Synthetic Pipeline Gas Symposium, American Gas Association, Chicago, October 30–31, 1972, p. 175.
8. Ralph M. Parsons Co. Demonstration plant: Clean boiler fuels from coal. U.S. Office of Coal Research R & D Report No. 82 — Interim Report No. 1. December 1973.
9. Skeist Laboratories, Inc. Chemical by-products from coal. U.S. Office of Coal Research R & D Report No. 43, November 1968.
10. Schmidt, C. E., Sharkey, A. G., Jr., and Friedel, R. A. Mass spectrometric analysis of product water from coal gasification. Bureau of Mines Technical Progress Report, TPR 86, December 1974.
11. Curran, G. P., Fink, C. E., and Gorin, E. Bench scale research on CSG process. U.S. Office of Coal Research R & D Report No. 16, Interim Report No. 3, Book III, June 1970.
12. Moeller, F. W., Roberts, H., and Britz, B. Methanation of coal gas for SNG. Hydrocarbon Process 53: No. 4, 69 (1974).
13. U.S. Office of Coal Research. Final environmental statement: Proposed process and equipment revisions to the synthetic fuels process pilot plant, Cresap, West Virginia. February 12, 1973.
14. Cooke, R., and Graham, P. W. The biological purification of the effluent from a Lurgi plant gasifying bituminous coals. Int. J. Air Water Poll. 9: 97 (1965).
15. Forney, A. J., et al. Analysis of tars, chars, gases, and water formed in effluents from the Synthane process. Bureau of Mines Technical Progress Report, TPR 76. January 1974.
16. Sexton, R. J. The hazards to health in the hydrogenation of coal. I. An introductory statement on general information, process description, and a definition of the problem. Arch. Environ. Health 1: 181 (1960).
17. Ketcham, N. H., and Norton, R. W. The hazards to health in the hydrogenation of coal. III. The industrial hygiene studies. Arch. Environ. Health 1: 194 (1960).
18. Hill, G. R., and Lyon, L. B. A new chemical structure for coal. Ind. Eng. Chem. 54: 36 (1962).
19. Ruch, R. R., Gluskoter, H. J., and Shimp, N. F. Occurrence and distribution of potentially volatile trace elements in coal. Illinois State Geological Survey Note No. 72, Urbana, August 1974.
20. Sather, N. F., et al. Potential trace element emissions from the gasification of Illinois coal. Illinois Institute for Environmental Quality, Chicago, February 1975.
21. Helfinstine, R. J., et al. Sulfur reduction of Illinois coals—washability studies. Part 1. Illinois State Geological Survey Circular 462, Urbana, 1971.
22. World Health Organization. Health Hazards of the Human Environment. WHO, Geneva, 1972.
23. Bodle, W. W., and Vyas, K. C. Clean fuels from coal—introduction to modern processes. In: Clean Fuels from Coal. Institute of Gas Technology Symposium, Chicago, September 10–14, 1973, p. 49.
24. Johnson, C. A., et al. Present status of the H-coal process. In: Clean Fuels from Coal. Institute of Gas Technology Symposium, Chicago, September 10–14, 1973, p. 549.
25. Yavorsky, P. M. Synthoil process converts coal to clean fuel oil. In: Clean Fuels from Coal. Institute of Gas Technology Symposium, Chicago, September 10–14, p. 539.
26. Frank, M. E. and Schmid, B. K. Economic evaluation and process design of a Coal-Oil-Gas (COG) refinery. In: Clean Fuels from Coal. Institute of Gas Technology Symposium, Chicago, September 10–14, 1973, p. 577.
27. Jones, J. F. Project COED, char-oil energy development. In: Clean Fuels from Coal. Institute of Gas Technology Symposium, Chicago, September 10–14, 1973, p. 383.
28. Weil, C. S., and Condra, N. I. The hazards to health in the hydrogenation of coal. II. Carcinogenic effect of materials on the skin of mice. Arch. Environ. Health 1: 187 (1960).
29. Seglin, L., and Eddinger, R. T. Coal (to synthetic crude oil). In: Encyclopedia of Chemical Technology Supplement. R.E. Kirk and D.F. Othmer, Eds. Interscience, New York, 1971, p. 195.
30. Cox, J. L. Catalysts for coal conversion. In: Clean Fuels from Coal. Institute of Gas Technology Symposium, Chicago, September 10–14, 1973, p. 311.
31. Donath, E. E. Hydrogenation of coal and tar. In: Chemistry of Coal Utilization. Supplementary Volume. H. H. Lowry, Ed., Wiley, New York, 1963, p. 1041.
32. American Conference of Governmental Industrial Hygienists. Documentation of the Threshold Limit Values. ACGIH, Cincinnati, 1970, p. 180.
33. Roberts, A. E. Platinosis. Arch. Ind. Hyg. 4: 549 (1951).
34. LeRoy, A. F. Interactions of platinum metals and their complexes in biological systems. Environ. Health Perspect. 10: 73 (1975).
35. Sexton, R. J. The hazards to health in the hydrogenation of coal. IV. The control program and the clinical effects. Arch. Environ. Health 1: 208 (1960).
36. National Academy of Sciences. Particulate Polycyclic Organic Matter. NAS, Washington, 1972.
37. Doll, R., et al. Mortality of gasworkers with special references to cancers of the lung and bladder, chronic bronchitis, and pneumoconiosis. Brit. J. Ind. Med. 22: 1 (1965).
38. Lloyd, J. W. Long-term mortality study of steelworkers. V. Respiratory cancer in coke plant workers. J. Occup. Med. 13: 53 (1971).
39. Mazumdar, S., et al. An epidemiological study of exposure to coal tar pitch volatiles among coke oven workers. J. Air Pollut. Control Assoc. 25: 382 (1975).