Environmental Health Perspectives
Vol. 26, pp. 121–124, 1978

Neurochemistry and Toxicology: Overview

by Terri Damstra*

We have witnessed a tremendous increase in our knowledge of the molecular and biochemical mechanisms which underly the activities of the nervous system. Such knowledge is essential in order to determine the basic mechanisms involved in neurotoxic events. An overview of how neurotoxins could conceivably interfere with some basic neurochemical processes is presented, along with a specific example of how an understanding of such processes can contribute to the detection of neurotoxicity and to the development of predictive testing techniques.

Introduction

Conceptually, the assessment of the potential adverse effects of toxic agents on the central (CNS) and peripheral (PNS) nervous system, may be divided into several components. Those of primary concern at this symposium are: (1) the detection of neurotoxicity, (2) the determination of the basic biochemical and physiological mechanisms involved, and (3) the development of predictive testing techniques. Some of the other clinical aspects of neurotoxicity such as prevention and treatment, are obviously very important but are not the major focus of this conference. The discussions of the first two days have focused mainly on the behavioral and morphological approaches and methodologies available for detecting and predicting neurotoxic effects. Today's session will consider the role of neurochemical approaches. The ultimate, unifying objective of neurochemistry is the elucidation of the basic molecular and biochemical mechanisms underlying neural functions or associated with alteration of these functions. It is through the determination of such mechanisms that neurochemical approaches can probably best contribute to the overall assessment of neurotoxicity. Although our knowledge of the biochemical activities subserving neural functions is still very rudimentary, enormous progress has been made in this area during the past half century.

* Office of Health Hazard Assessment, National Institute of Environmental Health Sciences, Research Triangle Park, North Carolina 27709.

Neurochemical Approaches

It has already been pointed out during this conference that toxic agents can affect the CNS and PNS in a variety of ways. Some agents act directly on the nervous system, whereas others disturb nonneuronal processes which may indirectly affect the CNS and/or PNS. Most of these toxins interfere with some biochemical system, either through general or specific mechanisms. Many toxic responses are the result of enzyme inhibition by allosteric, competitive, or noncompetitive mechanisms. Other, more generalized toxic effects may result from such processes as anoxia or protein denaturation. Neurotoxins can cause disturbances in the cerebrospinal fluid- and blood brain barriers; interfere with neuronal energy metabolism or the biosynthetic pathways of carbohydrates, lipids, nucleic acids, and proteins; alter the cellular permeability to ions; affect neurotransmitter synthesis, storage, release, and uptake; or inhibit neurosecretory processes. Such changes can occur in finely localized regions, in particular cell types (astrocytes, neurons, oligodendrocytes, etc.) and in specific subcellular organelles. Thus, the dimensions and complexity of the tasks confronting researchers attempting to determine the biochemical mechanisms underlying neurotoxicity are tremendous, and the approaches selected will depend to a large extent on the physical and chemical properties of the particular toxic substances under consideration.

One primary concern of neurochemists must be to correlate neurochemical alterations with struc-

tural, functional, behavioral, and clinical changes, even though such correlations are difficult to establish because of the potent compensatory capabilities of the nervous system. Many attempts at such correlations have focused on the role of putative chemical transmitter substances in the nervous system. This orientation does not imply that other aspects of neural biochemistry are unimportant, but studies on chemical transmission have provided one convenient way of exploring the interrelationships between neurochemical events and behavior. Furthermore, sophisticated methodologies are available and an extensive background literature on the basic mechanisms involved in chemical transmission already exist. Several of these will be discussed in the presentations of this session. I would like to give a brief overview of how neurotoxins might interfere with chemical transmission in the nervous system by simplifying and conceptualizing some of the events involved in this process. Comprehensive descriptions of chemical transmission mechanisms can be found in many reviews (*1–6*).

Figure 1 is a schematic presentation of a presynaptic neuron consisting of a cell body (I), myelinated axon (II), and nerve terminal (III); and of a postsynaptic membrane receptor region (IV). Transmitter-forming enzymes along with other proteins and cellular constituents are synthesized in the cell body (I) under control of the nucleus (N). After compartmentalization, the synthesized material (S) enters the axon (II) probably under the control of the Golgi apparatus (G). These materials, along with structural organelles, are then delivered to the presynaptic endings by the process of axoplasmic transport. Some compounds also supply the axolemma (A) and the myelin sheath, represented by parallel horizontal lines. Retrograde transport is indicated by the arrow towards the cell body. The axonal transport system utilizes specific proteins, microtubules (M), neurofilaments (N), and ATP.

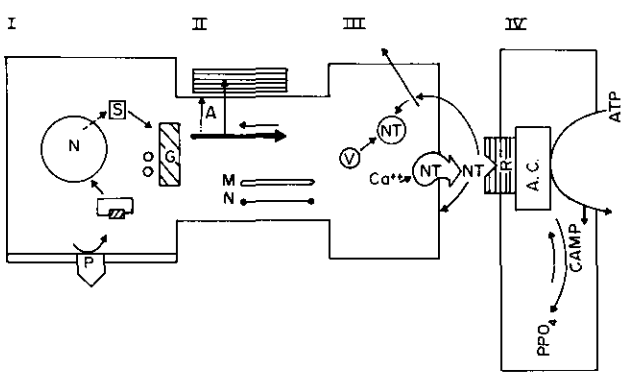

FIGURE 1. Schematic presynaptic neuron and postsynaptic receptor region.

Upon entry of the necessary precursors from the extracellular environment surrounding these presynaptic endings (III), transmitters are synthesized and packaged into pre-existing vesicles (V), along with ATP and proteins (e.g., vesiculin) which serve as "binders" for transmitter molecules. Upon stimulation of the presynaptic nerve ending, there is an influx of calcium ions, and the vesicles nearest to the membrane surface fuse to the surface. The neurotransmitter (NT) is then released into the synaptic cleft, a region several hundred Angstroms wide, via the process of exocytosis. The release of a neurotransmitter initiates a complex sequence of postsynaptic events. The transmitter impinges on the postsynaptic cell by binding to a particular membrane receptor (R). Excess transmitter may be rapidly inactivated via reuptake mechanisms, enzymatic degradation, or metabolic inactivation. Receptor binding results in an activation of a specific adenyl cyclase (AC) enzyme, which increases the production of cyclic AMP (CAMP). Cyclic AMP in turn activates specific protein kinases allowing the phosphorylation of specific protein substrates (PPO_4). It is thought that upon phosphorylation, conformational changes occur in membrane proteins which may produce changes in ion permeabilities. The resultant ionic fluxes may cause hyperpolarization or depolarization of the postsynaptic cells.

Phosphorylation of synaptic proteins may also lead to modifications of the functional properties of the postsynaptic membrane at other sites and thus lead to changes in interneuronal conductivity. This sequence of activity can be terminated through enzymatic dephosphorylation of proteins and cleavage of cyclic nucleotides.

Many other factors are known or hypothesized to modulate this series of events. For example, cyclic GMP may have effects on tissue protein phosphorylation that are opposite to that of cyclic AMP. Neurohormones can interact with cell surface receptors (P) and cause a variety of cellular and nuclear events, including the phosphorylation of nuclear proteins. The latter may alter transcription processes, and thus produce long-term changes in the properties of neurons. These simplified descriptions of synaptic transmission barely begin to scratch the surface of the complex molecular behavior of nerve tissue.

Since there is no evidence to the contrary, it must be assumed that neurotoxins can interfere at any stage with the above processes. The research to date has examined only a few of these events. Most studies have concentrated heavily on assays of the steady-state levels of transmitters and the activities of enzymes responsible for transmitter synthesis or

degradation; in some cases, transmitter turnover rates, and synaptic uptake and release mechanisms have also been studied. Consequently, our knowledge of the primary biochemical events associated with neurotoxicity is very limited. More comprehensive and diverse approaches are necessary. Some of these approaches will be reviewed and updated in the subsequent presentations.

Predictive Testing

I would like to conclude with an example of how our knowledge of basic neurochemical events may contribute to the detection of neurotoxicity and lead to the development of predictive testing techniques. It has long been known that organophosphorus insecticides can cause acute central CNS effects by inhibiting the crucial nervous system enzyme acetylcholinesterase. The primary neurochemical event associated with such inhibition has been shown to be the phosphorylation of a serine residue within the active site of this cholinesterase (*7*). In addition to such central cholinergic effects, some organophosphates may produce degenerative changes in the central and peripheral nervous system, which ultimately result in a sensory-motor neuropathy, but this neuropathy does not manifest itself until several days or weeks after exposure. This delayed neurotoxicity is seen in mammals, including man, and is especially pronounced in chickens; however, not all species are equally susceptible, and it is not readily induced in rodents. Adults are more susceptible than younger animals. This lesion is not primarily a function of the central cholinergic response, since most organophosphates are inactive. Indeed, protection against the delayed neurotoxic effects can sometimes be obtained with other esterase inhibitors. Some elegant studies, mainly by Johnson et al. (*8–10*), have shown that the neuropathy-inducing organophosphates interfere in a specific way with a characteristic membrane-bound nerve cell protein. Although the precise cellular location of this protein remains unknown, it has been isolated and characterized as "neurotoxic esterase." Neurotoxic esterase is present in various brain regions, and in spinal cord, and sciatic nerve. It has been found in all species examined, including the nonsusceptible ones. It accounts for about 5% of total brain cholinesterase activity. Extensive investigations on the role of neurotoxic esterase in organophosphorus-induced nerve degeneration support the following sequence of events.

Organophosphates can inhibit neurotoxic esterase by phosphorylating a serine residue within its active site [step 1, Eq. (1)]. Subsequent to this reaction, one of the R groups may in some cases undergo cleavage by hydrolysis, yielding an inactive enzyme with a stable ionized acidic group on the esteratic site (step 2).

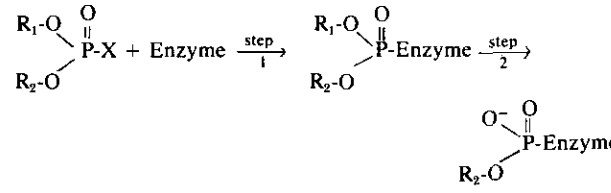

(1)

The organophosphorus compounds that are capable of producing such ionized complexes are the ones that can cause subsequent nerve degeneration, presumably by upsetting some normal process which ultimately results in neuropathy. Reactions of neurotoxic esterase with other organophosphates (phosphinates and carbamates) result in stable R——P bonds; no ionized group is formed, and nerve degeneration does not occur. Inhibition of neurotoxic esterase by these compounds actually may protect against the effects that might result from subsequent administration of the neuropathy-inducing compounds. Thus the delayed neuropathy depends on the nature of the R group and is secondary to the inhibition of "neurotoxic esterase." Although enzyme inhibition occurs immediately after exposure and activity returns to normal (due to resynthesized enzyme) after several hours, the neuropathy is not clinically detectable until 10–20 days later. Once exposure has occurred, there is presently no way of preventing the onset of neuropathy. The sequence of biochemical events beginning with the phosphorylation of neurotoxic esterase and ending in axonal degeneration has not been elucidated, but should have high priority since it may shed light on the development of other neuropathies, although at the present time there appears to be no common mechanism.

The isolation and characterization of neurotoxic esterase has made it feasible to develop *in vitro* tests for determining whether a compound has delayed neuropathy inducing properties. In addition, species variation, structure–activity relationships, chronic dosing effects, and potential preventive measures could also be evaluated in this system. Thus we have a concrete example of the role that basic neurochemical studies may play in the development of predictive testing techniques for humans.

Conclusion

Science historians indicate that there is often a 20-year lag between the inception of a discipline and its practical applications. Neurochemistry has clearly emerged as a distinct discipline during the past decades, but we are only beginning to witness some of its breakthroughs with respect to toxicology. The "black box" is turning grey.

REFERENCES

1. Antelman, S. M., and Caggiula, A. R. Norepinephrine-dopamine interactions and behavior. Science 195: 646 (1977).
2. Iverson, L. L. Dopamine receptors in the brain. Science 188: 1084 (1975).
3. Nathanson, J. A. Cyclic nucleotides and nervous system function. Physiol. Rev. 57: 158 (1977).
4. Snyder, S. H. Commentary: Neurotransmitter and drug receptors in the brain. Biochem. Pharmacol. 24: 1371 (1975).
5. Von Hungen, K., and Roberts, S. Neurotransmitter-sensitive adenylate cyclase systems in the brain. In: Reviews of Neuroscience, S. Ehrenpreis and I. J. Kopin, Eds.; Raven Press, New York, 1974.
6. Williams, M. Protein phosphorylation in nervous tissue: possible involvement in nervous tissue function and relationship to cyclic nucleotide metabolism. Progr. Neurobiol. 8: 183 (1977).
7. Eto, M. Organophosphorus Pesticides: Organic and Biological Chemistry, CRC Press, Cleveland, Ohio, 1974.
8. Johnson, M. K. The delayed neuropathy caused by some organophosphorus esters: mechanism and challenge. Crit. Rev. Toxicol. 3: 289 (1975).
9. Johnson, M. K. Organophosphorus esters causing delayed neurotoxic effects. Mechanism of action and structure/activity studies. Arch. Toxicol. 34: 259 (1975).
10. Cavanagh, J. B. The significance of the "dying-back" process in experimental and human neurological disease. Int. Rev. Exptl. Pathol. 3: 219 (1964).