Environmental Health Perspectives
Vol. 56, pp. 23-34, 1984

Inhalation Exposure Methodology

by Robert F. Phalen,* Richard C. Mannix* and Robert T. Drew†

Modern man is being confronted with an ever-increasing inventory of potentially toxic airborne substances. Exposures to these atmospheric contaminants occur in residential and commercial settings, as well as in the workplace. In order to study the toxicity of such materials, a special technology relating to inhalation exposure systems has evolved.

The purpose of this paper is to provide a description of the techniques which are used in exposing laboratory subjects to airborne particles and gases. The various modes of inhalation exposure (whole body, head only, nose or mouth only, etc.) are described at length, including the advantages and disadvantages inherent to each mode. Numerous literature citations are included for further reading. Among the topics briefly discussed are the selection of appropriate animal species for toxicological testing, and the types of inhalation studies performed (acute, chronic, etc.).

Introduction

Technology has led to an increase in the amount and variety of compounds in the breathing zone of modern man. The effects of exposure to these compounds can be predicted to some degree by laboratory toxicological evaluations. While the problems of ingestion of toxic materials in foods and water are well known, the insidious nature of man's exposure via the respiratory tract is not so well understood. In order to simulate man's environment for laboratory study, a special technology has evolved relating to design of environmental animal subjects.

This paper emphasizes the design and use of systems for controlled exposure to both airborne gases and particulate materials. Operational procedures, generation of exposure atmospheres, and sampling and characterization methodology are only briefly mentioned. The organization is by mode of exposure, including immersion of whole animals in chambers, exposures of the head only, exposures of the nose or mouth only, lung only, and partial lung exposures. Each of these modes of exposure has its own advantages, disadvantages, areas of application, and special design requirements. The objectives and available resources of a particular toxicologic investigation will determine the exposure method of choice.

The primary purpose of an inhalation exposure system is to provide a controlled, characterized delivery of airborne material to the respiratory system. Duration of exposures ranges through single acute exposures lasting minutes, to repeated and continuous exposures lasting months or perhaps years. Exposure may be to airborne material in physical states ranging from subatomic (ions, for example) to complex mixtures of gases and particles in both the solid and liquid state. In most inhalation studies it is desirable, but not always possible, to eliminate or limit exposure through skin, eyes, contaminated food, or other nonrespiratory pathways.

Exposure systems tend to become more complex when used for longer term exposures, especially when they must also serve as housing for animals. Criteria for animal housing are set forth in a guide for the care of laboratory animals, published and updated periodically by the U. S. Department of Health and Human Services (*1*). The air supply to any exposure system should be clean, except for intentional materials, maintained at a comfortable temperature, relative humidity and air velocity, and should not contain excessive amounts of waste products such as ammonia and carbon dioxide. For conscious animals, the exposure environment should be humane with respect to noise, vibration, lighting and freedom of movement. Environmental stresses can compromise experimental data by modifying the response of the animal. In short, unintentional stresses should be eliminated or at least minimized.

Control and characterization of the exposure atmosphere implies accurate monitoring and sampling in the breathing zone, either continuously, or frequently enough to define the exposure history. Determination of actual dose to the animal usually necessitates direct

*Air Pollution Health Effects Laboratory, Community and Environmental Medicine, University of California, Irvine, CA 92717.
†Medical Department, Brookhaven National Laboratory, Upton, NY 11973.

assay of exposed tissues; the simple product of airborne concentration and duration of exposure is seldom adequate, especially when airborne particles are present. The problems in aerosol characterization are formidable and the introductory works by Mercer (*2*) and Silverman, Billings and First (*3*) are recommended.

General Considerations

Toxicological evaluations are difficult because there are a variety of biological factors which contribute to variations in animal response. Inhalation studies are still more complex because of equipment requirements and the serious task of defining the quantity of material inhaled and retained by the animal. The physical and chemical properties of the material, the physical condition of the animal, and the natural clearance mechanisms all play a role in defining the exact dose. Contamination of the whole body often results in exposure via the skin and the gut following preening. The exposure of animals requires careful experimental design and planning. Studies of toxicity of airborne agents require the cooperative efforts of a team with expertise in toxicology, chemistry, aerosol and vapor physics, engineering and pathology.

Inhalation studies are undertaken in order to determine if exposure to specific compounds via the respiratory tract will result in effects applicable to man. Studies are carried out to detect local toxicity of the respiratory tract or systemic toxicity when materials are inhaled; to establish airborne contaminant limits for industrial and environmental protection; to investigate basic pulmonary structure and function; and to study the etiology of pulmonary disease.

Species

The ideal subject for studies relevant to man is man himself. However, human volunteers can only be used in instances where the toxicological hazard is already reasonably well defined, as in the studies of Hackney et al. (*4*), who studied effects of air pollutants on humans, Hazucha and Bates (*5*), who measured effects of SO_2 and ozone on human pulmonary function, and Strong (*6*), who described the EPA human exposure laboratory. (Full use should be made of information gained as a result of accidental human exposure.) Investigators must, therefore, use laboratory animals for most inhalation studies. Rats, mice, and dogs appear to be the species used most for inhalation studies, although investigators have used cats, guinea pigs, rabbits, monkeys, hamsters and donkeys.

The choice of species is often made on the basis of an ability to extrapolate the experimental results to man. However, choice on this basis alone is difficult, since the validity of such extrapolations is often questionable. The experimental objectives, the comparative morphology of the respiratory tract, the presence or absence of endemic infection, ventilation characteristics, and the similarity of physical, biochemical and physiological responses are all factors to consider when attempting to extrapolate animal experimentation data to man. Unfortunately, selection of a test animal is quite often based on more pragmatic criteria such as the size of the test animal, the expected incidence of effect which determines the number of animals to be exposed, and principally, for chronic inhalation studies, the cost of maintaining the animals over a long period of time. Hammond (*7*), in his review of the use of animals in toxicological research, suggested that, for general screening, multiple species testing may be more constructive than to search for a single best species. This approach has been followed by many facilities performing inhalation studies. At the University of Rochester, rats, dogs and monkeys were each exposed to uranium dioxide (*8*). In earlier studies with various other uranium compounds, dogs, rats, rabbits and guinea pigs were exposed (*9*). At the Navy Toxicology Unit rats, guinea pigs, monkeys, dogs, and mice have been used in inhalation studies (*10*). At the Lovelace Foundation, rats, mice and dogs have been used (*11,12*). Hueter and co-workers (*13*), in a study of automobile exhaust, exposed mice, rats, hamsters and guinea pigs; a later study by Hinners et al. (*14*) involved exposure of dogs, guinea pigs, rats and mice. In the pulmonary carcinogenesis studies at New York University (*15*), two species of rodents, rats and hamsters, were utilized. The rat has a comparatively diseased lung and is susceptible to many human diseases. Conversely, the hamster has a cleaner lung, and even in old animals the incidence of respiratory infection is low.

Types of Inhalation Tests

Inhalation tests can be divided into either acute, subchronic, or chronic studies. Acute studies generally consist of a single exposure with a duration of less than 8 hr. Subchronic and chronic studies consist of a number of intermittent or continuous exposures (22–24 hr/day) for fixed periods of time. According to a variety of agencies (*16*), the minimum duration for a chronic study is one year of 6-hr daily exposures repeated 5 days per week. Subchronic exposure studies usually range from 10 to 90 days.

Acute Toxicity. Acute tests are used to quickly determine the mode and range of toxicity of a material. This information can provide the basis for emergency exposure limits (levels immediately dangerous to life or health) and helps establish the range of exposure levels for subchronic and chronic inhalation studies. The acute tests can also define the nature of the toxic effects, the target organ or organs involved, and provide information on the kinetics and metabolism of the test material.

In toxicology, dose is usually defined as milligrams of agent per kilogram of body weight. This is the quantity of material directly introduced into the animal. In inhalation studies, the term dose is often difficult to define. It depends upon the duration and intensity of

the exposure, the variable breathing parameters of the test animal, and the target tissues. Many investigators incorrectly use the term dose when in fact they mean exposure. Thus, where most toxicologists measure an LD_{50}, inhalation toxicologists measure an LC_{50}. The LC_{50} is defined as that concentration to which animals are exposed for a specified period of time which will kill 50% of the animals within a fixed period of time after exposure. A common LC_{50} reported in the literature is the LC_{50} 14 days after a single 4-hr exposure.

Subchronic Studies. These studies permit elucidation of the more detailed exposure-effect relationships and also provide more information regarding metabolism, distribution, and excretion of the agents. A major

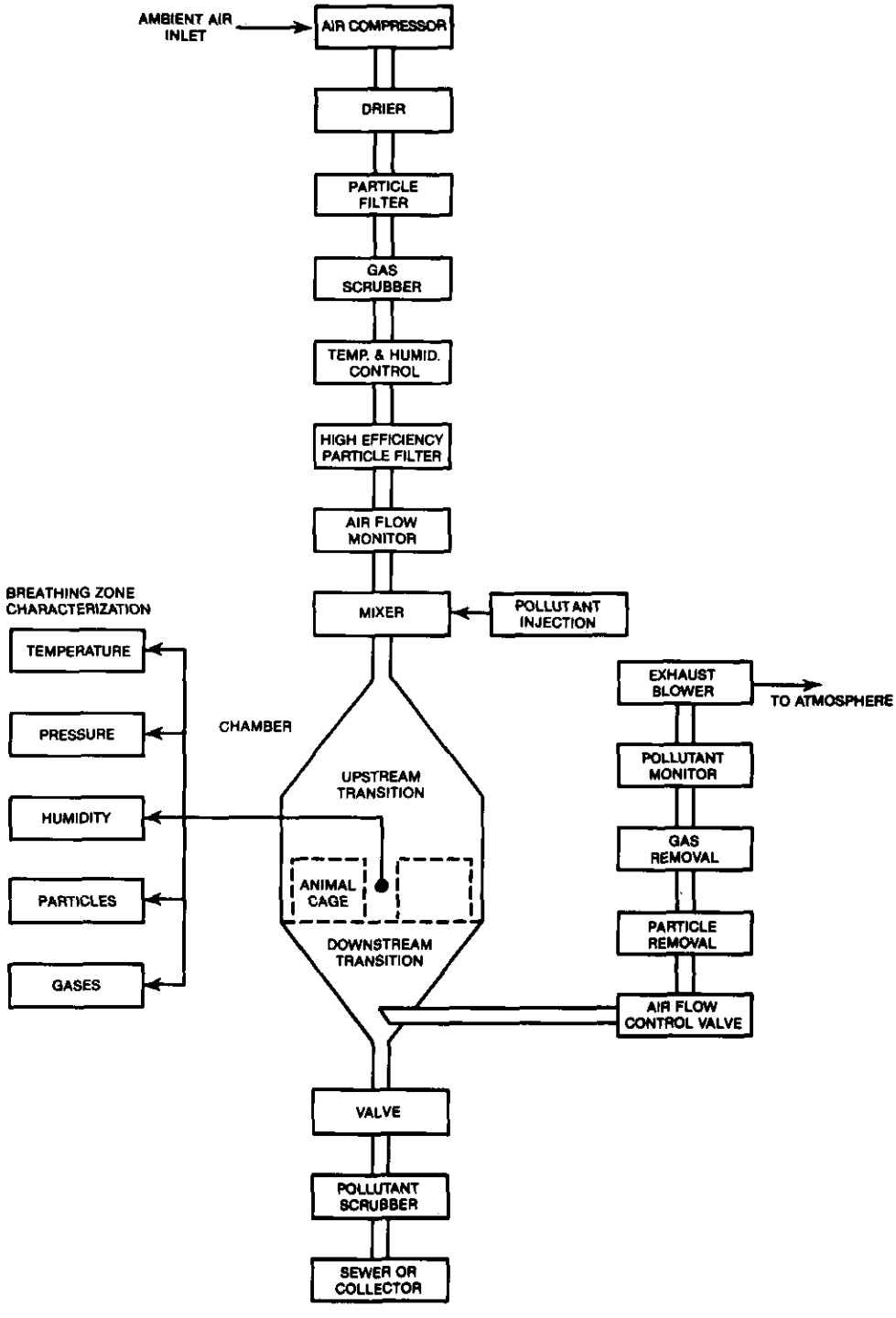

FIGURE 1. Simplified dynamic inhalation chamber exposure system.

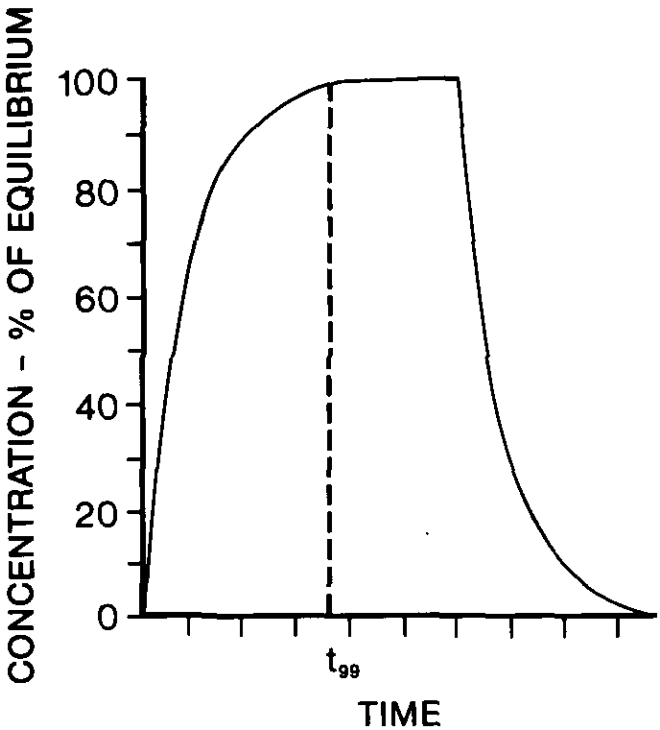

FIGURE 2. Buildup and removal of an agent vs. time in an inert dynamic exposure system.

purpose of such studies may be to further define levels for chronic exposures. Levels for limited exposures range from those producing minimal acute effects to those producing a "no effect" response.

Chronic Studies. Chronic studies are conducted in order to determine the effects of long-term continuous or intermittent exposures to compounds at levels where no acute toxicity is observed. In order to evaluate effects of chronic exposures, such as elevated incidences of infection, emphysema, or the induction of cancer, parallel inhalation controls must be run concurrently. Chronic exposures are generally patterned after an industrial type of exposure, giving the animals 6 to 7 hr daily exposures 5 days per week (intermittent exposures), or after an environmental exposure, with 22 to 24 hr of exposure per day, 7 days per week (continuous exposures) with an hour or so for feeding the animals and maintaining the chambers. In both cases, the animals are exposed to a fixed concentration of test material; thus, neither situation approaches the real world where concentrations of atmospheric pollutants are continuously fluctuating by up to several orders of magnitude. The principal difference between occupational exposure and continuous exposure is that with the former there is a 17 to 18 hr daily period for recovery, and an even longer recovery period during the weekend. The actual choice of intermittent or continuous exposure again depends on the objectives of the experiment. There are two practical reasons, however, for selecting intermittent exposures. First, intermittent exposures do not require two to three shifts on the job. Second, the contaminant generation and monitoring systems are simpler, as they only operate 6 hr per day.

Static vs. Dynamic Systems

Both static and dynamic systems have been used to assess inhalation toxicity. In a static system, an agent is introduced into a chamber as a bolus, and is subsequently mixed. Static systems are limited by two factors—the loss of material onto surfaces, and the finite volume of the chamber—and are not generally used to assess inhalation toxicity. Most inhalation facilities today use dynamic systems in which the airflow and the introduction of agents are continuous (Fig. 1). The chambers are usually square or hexagonal in cross section, with pyramidal top and bottom sections. Air is introduced at the top, either vertically or tangentially. Pollutant is generally introduced perpendicular to the airstream, with mixing occurring in the top cone. The air usually flows turbulently past the animals and is removed at the bottom. In such systems many factors, including wall loss, animal uptake, variations in flow, etc., can contribute to differences between the theoretical and actual concentrations of pollutants in the chamber. Therefore, these concentrations should always be measured by appropriate instruments that sample from the breathing zone. The dynamics of this type of system were examined and described by Silver (*17*).

The equilibrium concentration of any material in a chamber operating under dynamic conditions is a function of the amount of material entering the chamber and the quantity of air passing through the chamber. The buildup and removal of material is a logarithmic function of the air turnover rate (Fig. 2). The buildup and decay equation has the general form:

$$t_x = K(a/b)$$

where x is the percent equilibrium attained in time t, K is a constant dependent upon x, a is the volume of the chamber and b is the chamber flow rate. For a condition of 99% equilibrium, K is 4.6; for 95% of equilibrium, K is 3.

The concentration of a pollutant in a chamber during a typical exposure is shown in Figure 3. In general, the duration of the exposure is the time interval from t_a to t_b, which is long compared to t_{99}. The exposure after t_b is small and is nearly equal in area to the exposure lost during the period of buildup of the material in the chamber. These buildup and decay effects must be considered, however, when exposures of short duration are contemplated.

Whole Body Exposures

A multitude of published works exist in which specific exposure systems are described. Those cited here are

only a sample of the available references. The more comprehensive reviews and some unique systems are cited here (*14,18–26*). Whole body exposures are usually carried out in stainless steel and glass chambers operated under dynamic conditions. A typical chamber with its supporting components is shown in Figure 1. The hexagonal (cross section) University of Rochester chamber (Fig. 4) described by Leach et al. (*27*), still widely used, has a history of over 25 years in aerosol inhalation studies. One version (1.3 m^3 volume) with tapering top and bottom sections was designed for simultaneous exposure of 4 monkeys, 8 dogs, and 40 rats to radioactive aerosols. Similar chambers with rectangular cross section have been described by Laskin, Kuschner and Drew (*15*), and by Hinners, Burkart, and Punte (*14*), who published schematic drawings for chambers up to 5 ft on one side. Large, dome-shaped chambers (12 ft in diameter, 8 ft high) capable of operation at reduced pressures and suitable for lifetime housing of a variety of animals were designed by A. A. Thomas (*28*). Long-term (165 day) continuous housing of monkeys, dogs, rats and mice in the chambers reportedly had no significant effects on growth, organ weights, or a variety of blood chemistry/hematology determinations (*29*). Spherical chambers (6 ft in diameter) for exposure of large numbers of small animals (100 hamsters) were described by Stuart (*30*). The chambers described above all have specially-designed cages for holding experimental animals.

More recently, a portable, multi-tiered stainless steel exposure chamber (about 2 m^3 volume) providing for live-in animal housing and possessing unique airflow characteristics (Fig. 5) was developed by Moss (*31*) at Battelle Pacific Northwest laboratory. The chamber utilizes controlled air turbulence for uniformly exposing up to 192 rats, 360 mice or 30 rabbits in compartmental cage units mounted at six different vertical heights. An evaluation of the chamber is given in Beethe et al. (*32*).

Most inhalation system designs feature vertical airflow with cones at the inlet and outlet ends of the chamber in order to insure good aerosol distribution throughout the exposure zone. A multi-tiered inhalation exposure system has recently been developed by Ferin and Leach (*33*) that features horizontal airflow, preventing animal cages on lower tiers from being contaminated by the animal by-products (hair, infectious agents, ammonia, etc.) originating at higher levels. The aerosol characteristics, including aerosol uniformity and losses, were similar to those obtained in tests with Rochester-type hexagonal cross section chambers.

Advantages of whole body exposure systems include: adaptability to a large variety and large number of animals exposed either simultaneously or separately; capability for housing animals exposed either simultaneously or separately; capability for housing animals for long periods under exposure conditions, lack of restraint or anesthesia during exposure, and the existence of a relatively large data base for this type of exposure. Chambers can be sealed and are thus appropriate for use with relatively toxic materials and for exposures under conditions of nonambient pressure, temperatures, and humidities. Inhalation chambers are particularly useful for exposing animals to gases and vapors since there are few problems associated with handling animals subsequent to gaseous exposure. Large chambers also photograph well and demonstrate a high level of commitment of the laboratory to inhalation toxicology.

Several disadvantages are associated with inhalation exposure chambers. Exposure to particles is messy; airborne material can enter animals through skin, mouth and eyes and deposits on every surface, covering fur, food, caging and chamber surfaces. Animal wastes such as ammonia, carbon dioxide, hair and dander are

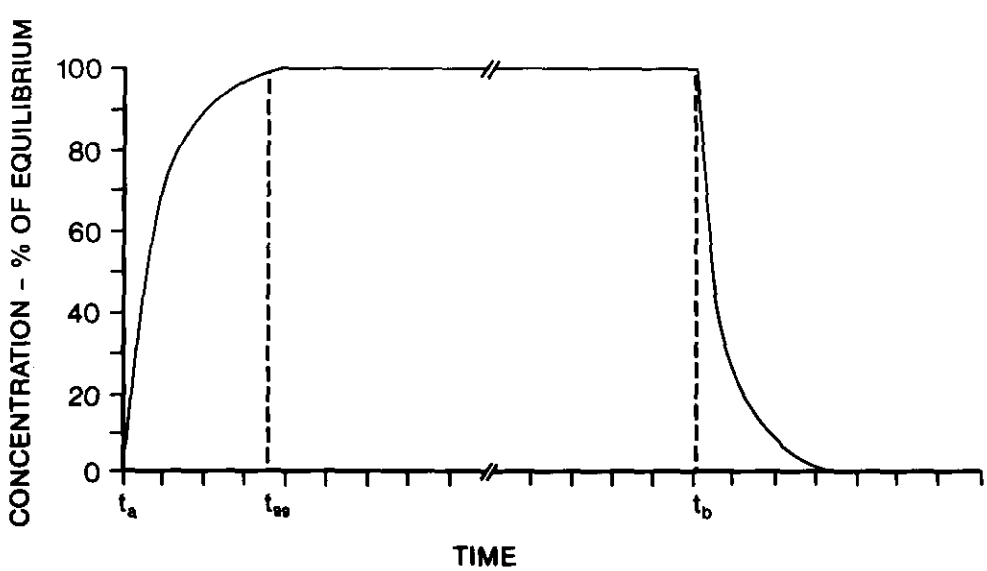

FIGURE 3. Concentration of an agent vs. time during an idealized exposure with a dynamic system.

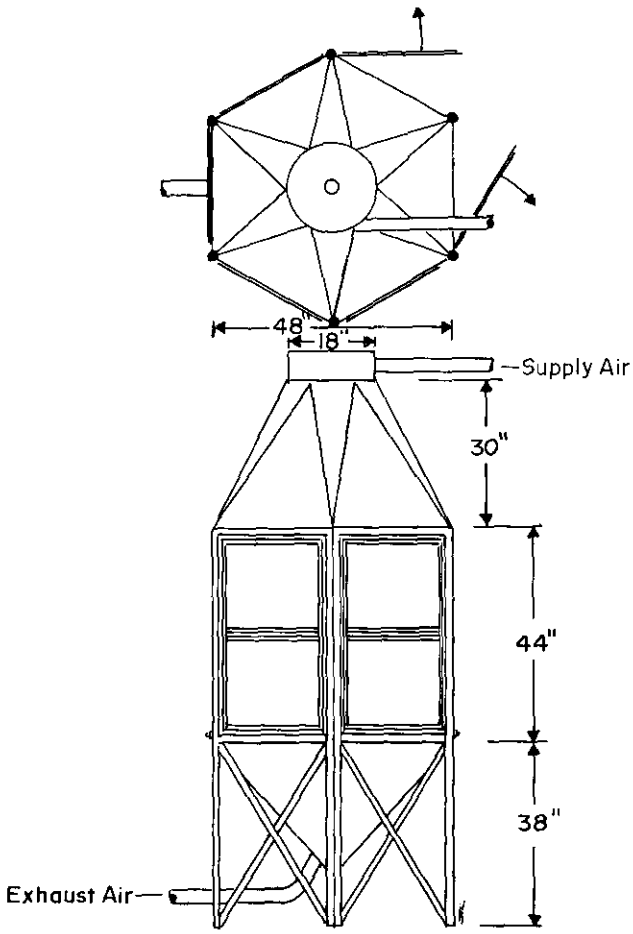

FIGURE 4. Rochester chamber of hexagonal cross section.

always present in the exposure environment. The dose received by animals in chambers is often highly variable. Animals tend to avoid exposure by huddling together, covering their noses with their own fur, or burying their noses in corners of cages. The level of exposure does not stabilize quickly, nor can the level always be varied sharply in large chambers operating at typical flow rates. Stabilization of proper exposure levels may require an hour or more (*14*) and the effects of adjustments made on generating equipment are not seen immediately. The large volumes of air required result in consumption of large quantities of exposure material, greater expense of air-conditioning, and more expensive air cleaning procedures. Chambers can be quite wasteful and inefficient. Animals in chambers are somewhat remote and it is difficult to be aware of their condition or to monitor physiologic parameters.

The cost of chambers is relatively high, especially since they are usually constructed of fairly inert materials such as stainless steel, special alloys of metals, glass, and thermoplastics. Chambers should be made from materials that do not significantly change, deplete, or augment the desired atmospheres (*21*). It may be convenient to cover the walls of a chamber with disposable stainless steel foil or another protective material.

Losses to chamber surfaces, especially of particulate materials, can be a severe problem. Losses can be diminished by use of large volume chambers, nonturbulent air flows, and electrically conductive interior surfaces. Nonmetallic surfaces are notorious for acquiring local regions of high charge that scavenge particles due to electrostatic forces. An unlucky designer may inadvertently end up with an unwanted, overpriced electrostatic precipitator.

Chamber air should be cleaned and conditioned and temperature and humidity should be controlled. Spatial uniformity of airborne materials is usually achieved by by fitting the chamber with cone- or pyramid-shaped entry and exit sections (*14,21,23,27*). Uniformity is also achieved by proper injection and mixing of materials into the chamber air. The effects of various injection modes was described by Carpenter and Beethe (*34*). Venturi sections and mixing chambers may be necessary (*27*). Systematic rotation of cages during exposure is desirable. Temporal uniformity of exposure requires not only stable generators and airflow systems, but also chamber construction materials that do not change their reactivity with time during exposure. Acrylic, for example, has variable reactivity to ozone over a period of hours at moderate airborne levels.

Samples for characterization of the exposure atmosphere should be taken from the breathing zone of the animals through lines that do not compromise the sample. The use of movable, large bore metallic sampling lines is advisable. Sampling is a serious problem, and samples must be taken during the actual exposures, as the presence of animals may greatly alter the concentrations present.

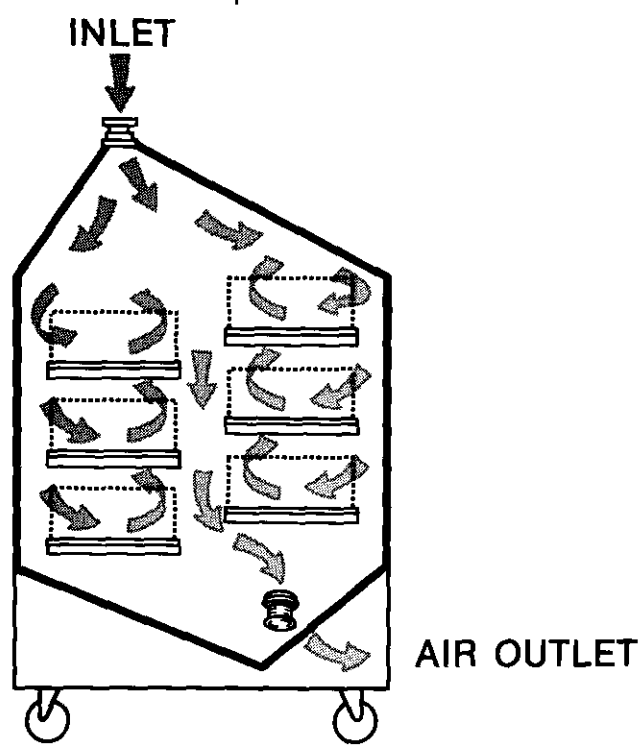

FIGURE 5. Airflow patterns in the Battelle chamber design by Moss and Brown.

Provision for animal care and observation should be considered in chamber design. Internal flushing, watering and feeding systems must be carefully designed to prevent accumulation of exposure materials and animal wastes on their surfaces. A portable high pressure hot water cleaning system can be very useful. Large chambers may be provided with air-lock type entries so that a continuous exposure can be maintained (*21,23,28*). Observation windows should be limited in size to prevent the undesirable effects of static charge buildup.

Environmental noise, vibration, temperature and humidity should all be considered. Valves and motors are sources of noise that can be reduced by placing soft, in-line air filters between them and the chamber. Motors attached to chamber surfaces by hard mounts can cause excessive vibration. If possible, scientific personnel should enter the chamber during operation and remain there long enough to notice any potentially undesirable environmental stresses before animals are exposed inside the chamber.

A safe exhaust system is important, especially when toxic, explosive, or otherwise offensive atmospheres are investigated. This may involve the addition of prefilters, high efficiency filters, electrostatic precipitators, wet scrubbers or even collection of all of the chamber output.

Animal loading limits are based upon consideration of reactivity of animal surfaces with the exposure atmosphere, generation of heat and water vapor by the animals, and oxygen consumption. Experience indicates that no more than 5% of the chamber volume should be occupied by animals (*21,23*).

System reliability involves consideration of failure of critical components, ease of routine maintenance, and replacement of finite lived components such as filters and seals. Filters can be continuously monitored for pressure drop during chamber operation and replaced when they become excessively occluded. Other considerations which enter into the design of chambers include animal placement, compatibility of species, caging design, placement of generators, and portability. Original designs should be drawn with great care and hopefully with the help of persons having practical experience in exposure chamber operation.

Head-Only Exposures

Head-only exposure systems are typified by those described by Stuart (*30*) for dogs, by Kirk, Rehnberg and Morken (*35*) and by Thomas and Lie (*12*) for rodents. Scheimberg (*36*) mentions a small individual helmet exposure chamber worn by monkeys during exposures to aerosols. In all of the above systems, animals are physically restrained or anesthetized.

The primary advantages of head-only exposure systems include the ability to perform repeated brief exposures and to limit the number of possible pathways of entry of material into the animal. It is usually difficult, if not impossible, for the animal to avoid inhalation exposure in the head-only system. The head or neck region of the animal is usually firmly restrained, and resultant stress to the animal may be significant. Other disadvantages include losses of material to the fur of the head (especially if fur becomes electrically charged), difficulty in achieving a good neck seal without interfering with blood flow or ventilation and the additional difficulty and time required in handling, loading, and unloading of animals.

Uniformity of exposure from one animal to another may be achieved by maintaining adequate dispersion and a large throughput of air to prevent animals from breathing from a depleted zone. When the head-only exposure is from a chamber, distribution of material in the chamber must be uniform. Helmet exposures may also require large air flows to prevent condensation of expired water vapor, buildup of expired products, or depletion of the exposure atmosphere. As animals inhale and exhale, large pressure fluctuations may occur in the system. Raabe (*37*) described placement of a spirometer in parallel with the animal that can reduce these fluctuations and also provide a record of the breathing pattern during exposure. As in chamber exposures, losses and sampling of the exposure atmosphere must be carefully considered to insure adequate definition of the exposure. Environmental considerations include proper air temperature and humidity, control of carbon dioxide, and control of noise and vibration. Physical comfort of the animal requires a tolerable seal around the neck. Two systems in use are inflatable collars (*12,35*) and thin rubber membranes having a small hole that stretches to accommodate the neck. A wide, soft support beneath the neck may be necessary to prevent choking the animal.

During exposure of unanesthetized animals, restraint additional to that about the neck may be necessary. For large laboratory animals, comfortable slings and padded stocks may be useful (*11,38*). A struggling, restrained animal may rapidly develop very high body temperature, and anesthesia or sedation should be considered.

Nose/Mouth-Only Exposures

Inhalation exposures limited to either the nose or oral cavity are usually accomplished by using masks, catheters in the nose or individual tubular containers with one end open to the exposure atmosphere. Mask-type exposure, usually limited to relatively large animals (e.g., dogs), is described by Bair et al. (*39*), Boecker, Aguilar and Mercer (*11*). Cuddihy and Boecker (*40*), Frank and Speizer (*41*) and Poynter and Spurling (*42*). Masks used for pulmonary function testing of dogs, but suitable for inhalation exposures, are described by Dubin and Morrison and for ponies by Mauderly (*44*). Nasal tubes for inhalation exposure of donkeys are described by Albert et al. (*45*). Battista (*18*) discusses a mask used on the chicken. Restraint of masked, unanesthetized large animals is typically by sling (*11*) or stocks (*38*).

Tubular holders and delivery systems for nose-only exposure of rodents are described by Henderson (*46*),

Raabe et al. (*47*) and Smith and Spurling (*26*). Perforated metal holders for small rodents, as described by Brar et al. (*48*), can reduce the stress due to a buildup of body heat during exposure. Mauderly and Tesarek (*49*) describe alterations in pulmonary function induced by the restraining devices used in inhalation exposures. In the past, these systems were not considered for chronic exposures because of stress induced by confinement. Recently, Smith et al. (*50*) reported that rats and hamsters can be confined in nose tubes 6 hr/day, 5

Table 1. Summary of advantages, disadvantages, and design considerations associated with each mode of exposure.

Mode of exposure	Advantages	Disadvantages	Design considerations
Chambers (whole body)	Capable of exposing large numbers of animals and species	Surface contamination results in dermal, eye and oral exposure from preening	Clean air (*14,20,33*)
	Suitable for chronic studies	Uses large amounts of test material	Inert materials (*21,23*)
	Minimum restraint	Requires large air cleaning system	Losses (*21,23*)
	Can generate relatively stable concentrations	Cannot pulse exposures	Even pollutant distribution (*14,23,27*)
	Background data available	Surface contamination is a source of facility and personnel contamination	Sampling (*2,3*)
	Controllable environment	Equipment is expensive	Animal care and observation (*1,14,23,27,32*)
	Can be set up for minimal animal handling	Animal excreta can interact with pollutants	Noise, vibration, temperature and humidity (*1,14,20,21*)
	Can house animals in chambers		Exhaust air treatment
	Labor efficient		Loading (*21,23*)
			Reliability
			Portability (*32*)
Head only	Can use for repeated exposure	May be stressful	Even distribution
	Minimal skin contamination	Losses can be large	Pressure fluctuations
	More efficient dose delivery	Neck seal problems	Sampling and losses
	Better control of dose	Labor intensive	Air temperature and humidity
			Animal comfort (*12,35*)
			Animal restraint (*11,38*)
Nose/mouth only	No skin contamination	Probably is stressful	Pressure fluctuations
	Minimal oral exposure	Need good face seal	Body temperature
	Can be used for repeated exposures	Labor intensive	Sampling
	Uses much less material	Technically difficult	Seals
	Material easy to contain		Losses in plumbing and masks
	Exposures can be pulsed		
	Personnel and facility contamination minimized		
Lung only	Precision of dose	Technically difficult	Air humidity and temperature
	One route of exposure	Anesthesia or tracheostomy	Stress to animal
	Uses less material (efficient)	Limited to small numbers	Physiologic support
	Can pulse the exposure	Bypasses nose	
		Artifacts in deposition and response	
		Technically more difficult	

Table 1. Summary of advantages, disadvantages, and design considerations associated with each mode of exposure. (continued)

Mode of exposure	Advantages	Disadvantages	Design considerations
Partial lung	Precision of total dose	Anesthesia	Stress to animal
	Localization of dose	*Placement of dose*	*Physiologic support*
	Can achieve very high local doses	Difficulty in interpretation of results	
	Unexposed control tissue from same animal	Technically difficult	
		Possible redistribution of material within lung	
		Possible high damage to local tissue	

days/week for up to 4 months with no untoward effects. This observation may be crucial to the conduct of chronic studies with hazardous particulate compounds.

Nose exposures limit the initial entry of materials to the respiratory tract and oral cavity (possible eye irritation is thus eliminated), less exposure material need be generated per animal, containment of material within the exposure apparatus is straightforward, and the level of concentration of the exposure material may be rapidly changed. This type of exposure can involve considerable stress due to close confinement. Getting good seals around the face and extra handling of subjects are other disadvantages of such exposure systems.

General design considerations are similar to those of the head-only systems. Mask design presents some additional special problems. Masks should be comfortable, seal tightly, and allow for collection or drainage of saliva. Successful masks or nasal tubes are usually carefully handmade and the literature contains some useful designs and descriptions (*18,39,43–45*). Inhalation exposure masks may also be used for pulmonary function testing, provided the seal is good and the dead space is reasonably small. Perforated metal tubes that conduct away body heat and permit direct ventilation of the animal can be used for holding animals. Glass, plastic and even solid metal tubular enclosures can lead to excessive body heating within minutes of introducing the animals into the tubes.

Lung-Only Exposures

Exposure via direct inhalation through intratracheal tubes is reported by Auerbach et al. (*51*) and by Phalen and Morrow (*52*), Bernstein et al. (*53*) have recently described a technique for intratracheal exposure of anesthetized rats to airborne fibers via an oral tracheal tube. Battista et al. (*18*) describe a dual-lumen tube that is passed through a chronic tracheostomy, allowing for separation of inspired and expired air, and possessing very little dead space.

Insufflation of aerosol directly into the lung through intratracheal catheters was used by Bianco et al. (*54*) in studies with radioactive tantalum aerosol. Pulsed insufflation from a compressed-air dust elutriator was in synchrony with spontaneous inspirations.

A technique for performing chronic tracheostomies in laboratory animals is described by Thilenius and Vial, but an undesirable effect of tracheostomy in dogs, viz., altered brain temperature, is reported by Baker, Chapman and Nathanson (*56*).

The lung may be directly exposed through conventional intratracheal tubes or via tracheostomies (*18, 51,52*). Tubes placed into the trachea require either anesthesia or prior surgical preparation of the subject, neither method being very popular in small animals.

These exposures allow delivery by inhalation of relatively precise, controlled doses, with the exposure limited to the lung. The nose is bypassed, which sometimes is an advantage, but at the same time jeopardizes extrapolation to more natural-type exposure. Delivery is very efficient, in that very little excess material need be generated and brief exposures are easily performed.

Major problems include various technical difficulties of procedure that make exposure of large numbers of animals time-consuming. Artifacts associated with this type of exposure include effects of anesthesia or surgical intervention, drying of the trachea, and possible abnormal deposition patterns in the lung or impairment of ventilation caused by in-dwelling tubing.

Special considerations include precise control of temperature and humidity of inhaled air, stress to the animal, and the possible necessity of physiologic support in maintaining proper ventilation and body temperature.

Partial Lung Exposure

Typically, insufflations of airborne materials and instillations of materials in liquids are used to expose subunits of the lung. A catheter may be placed into a lobe or other subunit and the study material passed through in a steady stream, or in puffs synchronized with breathing (*54*). The total dose can be very precisely controlled, localized to a specific region, and adminis-

tered at local levels that would be lethal if given to a larger target. For example, one lobe may be exposed and other lobes used for life support or control tissue.

Problems occur in the need for general anesthesia and precise placement of catheters, and difficulty in extrapolation of results. This type of exposure is perhaps the most difficult technically, and considerable effort must be expended on each animal in order to obtain valid results. Additionally, nonphysiological redistribution of material within the lung may occur after initial placement.

In designing such experiments, the critical considerations include physiologic support of the subject, including maintenance of anesthesia and proper ventilation. The concentration, pH, temperature and irritant nature of the exposure material must be taken into consideration as unwanted, severe tissue damage may otherwise occur.

Characteristics of Various Modes of Exposure

Each of the common modes of exposure by inhalation has its own advantages, disadvantages, and special design requirements. Table 1 is presented as an aid to comparison of modes of exposure. Whether a particular feature is considered to be an "advantage" or a "disadvantage" depends upon what one is trying to do. For example, absorption of exposure material through multiple pathways as occurs in chambers is listed as a disadvantage; it may obviously be an advantage in certain types of investigations.

Discussion

Controlled exposure of animals by inhalation is never a trivial endeavor. No single exposure device, no matter how sophisticated, can serve all perposes. Chambers are almost essential for continuous exposures and can also be used to mix, hold, and supply materials for exposure of animals outside the chamber. Other modes of exposure—head only, nose/mouth only, lung only and partial lung—require specially designed, often handmade, devices as well as personnel well trained in animal handling and life support.

The ethical considerations involved in inhalation exposures are not trivial. In an inhalation experiment the subject is often critically dependent on the exposure system for delivery of a breathable atmosphere in a comfortable environment. Without adequate monitoring systems, animals can be placed in situations of high CO_2, extremes in humidity and temperature of the air, or cruel confinement without the awareness of the investigator. Improperly fitted collars, slings and other restraint devices can cause considerable discomfort. Padding should be used liberally and sedation or anesthesia considered in many cases. Horses, donkeys, ponies, pigs and possibly other animals seem to require some freedom of movement of the head when restrained in an unanesthetized state for more than brief periods. Animals can overheat within minutes in close-fitting body enclosures unless provision is made for cooling. Ethical experimentation and proper scientific procedure require that the investigator have intimate knowledge of stresses placed on the animal. All too often this is not the case. Training of animals, or at least putting them through a few short trial sham exposures, can help them to relax and thus improve their performance during actual exposure, as well as improve the quality of resultant data.

This paper has been written to acquaint the reader with the various techniques for exposing live animals to airborne agents. Emphasis has been placed on the specific requirements for the whole body exposure, head only exposure, nose exposure, exposure by nose or tracheal cannulation and finally, exposure to specific loci in the lung using tracheal cannulation procedures. Use of all of these techniques requires highly skilled personnel. In all cases, the actual concentration of test material should be characterized by making measurements of concentration and particle size during the actual exposures. Finally, care must be taken that these studies are performed in a humane and ethical manner.

This research was supported by the Electric Power Research Institute (Contract No. RP 1112), the Southern California Edison Company (Contract No. ES 01835) and the U. S. Department of Energy (Contract No. DE-ACO2-76CH00016).

Academic Press has kindy permitted our liberal use of information originally published in Methods of Animal Experimentation (W. I. Gay, editor), 1973.

The authors thank Sonia Usdansky, Nancy Kain and Jayne Cutt for their help in the preparation of the manuscript.

REFERENCES

1. U. S. DHEW. Guide for the Care and Use of Laboratory Animals. U. S. Department of Health, Education, and Welfare, Public Health Service, National Institutes of Health, 1974, DHEW Publication No. (NIH) 74-23.
2. Mercer, T. T. Aerosol Technology in Hazard Evaluation. Academic Press, New York (1973).
3. Silverman, L., Billings, C. E., and First, M. W. Particle Size Analysis in Industrial Hygiene. Academic Press, New York, 1971.
4. Hackney, J. D., Linn, W. S., Buckley, R. D., Pederson, E. E., Karuza, S. K., Law, D. C., and Fischer, D. A. Experimental studies on human health effects of air pollutants. I. Design considerations. Arch. Environ. Health 30: 373–378 (1975).
5. Hazucha, M., and Bates, D. V. Combined effect of ozone and sulfur dioxide on human pulmonary function. Nature 257: 50–51 (1975).
6. Strong, A. A. Description of the Cleans Human Exposure Facility. U.S. EPA, HERL, Office of Research and Development, Research Triangle Park, NC, 1978, EPA-600/1-78-064.
7. Hammond, P. B. The Use of Animals in Toxicological Research. NIEHS Task Force on Research Planning in Environmental Health Science, National Library of Medicine, Bethesda, MD, 1970.
8. Leach, L. J., Maynard, E. A., Hodge, H. C., Scott, J. K., Yuile, C. L., Sylvester, G. E., and Wilson, H. B. A five year inhalation study with natural uranium dioxide (UO_2) dust. I. Retention and biologic effect in the monkey, dog, and rat. Health Phys. 18: 599–612 (1970).

9. Stokinger, H., Baxter, R. C., Dygert, H. P., Labelle, C. W., Laskin, S., Pozzani, U. C., Roberts, E., Rothermel, J. J., Rothstein, A., Spiegl, C. J., Sprague, G. F. III, Wilson, H. B., and Yaeger, R. G. In: Pharmacology and Toxicology of Uranium Compounds (C. Voegtlin and H. C. Hodge, Eds.), 1st ed., Vol. III. McGraw-Hill, New York, 1949, p. 423.
10. Jones, R. A., Jenkins, L. J., Jr., Coon, R. A., and Siegel, J. Effects of long-term continuous inhalation of ozone on experimental animals. Toxicol. Appl. Pharmacol. 17: 189–202 (1970).
11. Boecker, B. B., Aguilar, F. L., and Mercer, T. T. A canine inhalation exposure apparatus utilizing a whole body plethysmograph. Health Phys. 10: 1077–1089 (1964).
12. Thomas, R. G., and Lie, R. Procedures and equipment used in inhalation studies on small rodents. U.S. Atomic Energy Commission Research and Development Report, Lovelace Foundation Report No. LF-11, Albuquerque, NM, 1963.
13. Hueter, F. G., Contner, G. L., Busch, K. A., and Hinners, R. G. Biological effects of atmospheres contaminated by auto exhaust. Arch. Environ. Health 12: 553–560 (1966).
14. Hinners, R. G., Burkart, J. K., and Punte, C. L. Animal inhalation exposure chambers. Arch. Environ. Health 16: 194–206 (1965).
15. Laskin, S., Kuschner, M., and Drew, R. T. Studies in pulmonary carcinogenesis. In: Inhalation Carcinogenesis (M. G. Hanna, Jr., P. Nettesheim and J. R. Gilbert, Eds.), U. S. Atomic Energy Commission, Oak Ridge, TN 1970, pp. 321–351.
16. Gross, J. B. Regulatory guidelines for inhalation toxicity testing. In: Inhalation Toxicology (B. K. Leong, Ed.), Ann Arbor Science, Ann Arbor, MI, 1981, pp. 279–298.
17. Silver, S. D. Constant flow gassing chambers: principles influencing design and operation. J. Lab. Clin. Med. 31: 1153–1161 (1946).
18. Battista, S. P., Guerin, M. R., Gori, B. G., and Kensler, C. J. A new system for quantitatively exposing laboratory animals by direct inhalation. Arch. Environ. Health 27: 376–382 (1973).
19. Drew, R. T. In: Inhalation Chamber Technology (R. T. Drew, Ed.), BNL Formal Report No. 51318, Brookhaven National Laboratory, Upton, NY, 1981.
20. Drew, R. T., and Laskin, S. Environmental inhalation chambers. In: Methods of Animal Experimentation, Vol. 4 (W. I. Gay, Ed.), Academic Press, New York, 1973.
21. Fraser, D. A., Bales, R. E., Lippmann, M., and Stokinger, H. E. Exposure Chambers for Research in Animal Inhalation. U. S. Public Health Service Publication No. 57, U.S. Government Printing Office, Washington, DC, 1959.
22. Hoffman, D., and Wynder, E. L. Chamber development and aerosol dispersion. In: Inhalation Carcinogenesis (M. G. Hanna, Jr., P. Nettesheim and J. R. Gilbert, Eds.), U. S. Atomic Energy Commission, Oak Ridge, TN, 1970, pp. 173–191.
23. Lippmann, M. Experimental inhalation studies—equipment and procedures. In: Inhalation Carcinogenesis (M. G. Hanna,Jr., P. Nettesheim and J. R. Gilbert, Eds.), U. S. Atomic Energy Commission, Oak Ridge, TN, 1970, pp. 55–76.
24. Lippmann, M. Aerosol exposure methods. In: Generation of Aerosols and Facilities for Exposure Experiments (K. Willeke, Ed.), Ann Arbor Science Publishers Inc., Ann Arbor, MI, 1980, pp. 443–458.
25. Phalen, R. F. Inhalation exposure of animals. Environ. Health Perspect. 16: 17–24 (1976).
26. Smith, S. W., and Spurling, N. W. Device for exposing the respiratory tract of the rat to medicinal aerosols. Lab. Practice 23: 717–721 (1974).
27. Leach, L. J., Spiegl, C. J., Wilson, R. H., Sylvester, G. E., and Lauterbach, K. E. A multiple chamber exposure unit designed for chronic inhalation studies. University of Rochester Report UR-534, Rochester, NY, 1958.
28. Thomas, A. A. Chamber equipment design considerations for altitude exposures. In: Proceedings of the Conference on Atmospheric Contamination in Confined Spaces. Aerospace Medical Research Laboratories, Wright-Patterson Air Force Base, Ohio, 1965, TR-65-230.
29. Egan, G. E., and Fogle, G. L. A comparison of experimental control animals housed in altitude chambers and animal rooms. In: Proceedings of the Fourth Annual Conference on Atmospheric Contamination in Confined Spaces. Aerosopace Medical Research Laboratories, Wright-Patterson Air Force Base, Ohio, 1965, AMRL-TR-68-175.
30. Stuart, B. O., Willard, D. H., and Howard, E. B. Studies of inhaled radon daughters, uranium ore dust, diesel exhaust, and cigarette smoke in dogs and hamsters. In: Inhaled Particles, III (W. H. Walton, Ed.), Unwin Brothers Ltd., Surrey, England, 1971.
31. Moss, O. R. A chamber providing uniform concentration of particulates for exposure of animals on tiers separated by catch pans. In: Inhalation Chamber Technology (R. T. Drew, Ed.), BNL Formal Report No. 51318, Brookhaven National Laboratory, Upton, NY, 1981.
32. Beethe, R. L., Wolff, R. K., Griffis, L. C., Hobbs, C. H., and McClellan, R. O. Evaluation of a recently designed multi-tiered exposure chamber. Lovelace Biomedical and Environmental Research Institute, Publication No. LF-67, NTIS, Springfield, VA, 1979.
33. Ferin, J., and Leach, J. F. Horizontal airflow inhalation exposure chamber. In: Generation of Aerosols and Facilities for Exposure Experiments (K. Willeke, Ed.), Ann Arbor Science Publishers, Ann Arbor, MI, 1980, pp. 517–523.
34. Carpenter, R. L., and Beethe, R. L. Cones, cone angles, plenums, and manifolds. In: Inhalation Chamber Technology (R. T. Drew, Ed.), BNL Formal Report No. 51318, Brookhaven National Laboratory, Upton, NY, 1981.
35. Kirk, W. P., Rehnberg, B. F., and Morken, D. A. Acute lethality in guinea pigs following respiratory exposure to ^{85}Kr. Health Phys. 28: 275–284 (1975).
36. Scheimberg, J., McShane, O. P., Carson, S., Swann, H. E., and Blair, A. M. Inhalation of a powdered aerosol medication by non-human primates in individual space-type exposure helmets (abstract). Toxicol. Appl. Pharmacol. 25: 478 (1973).
37. Raabe, O. G. New systems for exposure of ponies and beagle dogs to radioactive aerosols. Paper presented at American Industrial Hygiene Association Annual Meeting, Minneapolis, MN, June 1975.
38. Mauderly, J. L., Nenno, W. C., and Morrison, G. A. Stocks for holding unanesthetized dogs in the standing position. Lab. Anim. Sci. 21: 263–266 (1971).
39. Bair, W. J., Porter, N. S., Brown, D. P., and Wehner, A. P. Apparatus for direct inhalation of cigarette smoke by dogs. J. Appl. Physiol. 26: 847–850 (1969).
40. Cuddihy, R. G., and Boecker, B. B. Controlled administration of respiratory tract burdens of inhaled radioactive aerosols in beagle dogs. Toxicol. Appl. Pharmacol. 25: 597–605 (1973).
41. Frank, N. R., and Speizer F. E. SO_2 effects on the respiratory system in dogs. Arch. Environ. Health 11: 624–634 (1965).
42. Poynter, D., and Spurling, N. W. Some cardiac effects of beta-adrenergic stimulants in animals. Postgrad. Med. J. 47: 21–24 (1971).
43. Dubin, S., and Morrison, G. A face mask and mouthpiece for respiratory studies in unanesthetized beagle dogs. J. Appl. Physiol. 27: 104–105 (1969).
44. Mauderly, J. L. Evaluation of the grade pony as a pulmonary function model. Am. J. Vet. Res. 35: 1025–1029 (1974).
45. Albert, R. E., Berger, J., Sanborn, K., and Lippmann, M. Effects of cigarette smoke components on bronchial clearance in the donkey. Arch. Environ. Health 29: 96–101 (1974).
46. Henderson, D. W. Apparatus for study of airborne infection. J. Hyg. 50: 53–68 (1952).
47. Raabe, O. G., Bennick, J. E., Light, M. E., Hobbs, C. H., Thomas, R. L., and Tillery, M. I. An improved apparatus for acute inhalation exposure of rodents to radioactive aerosols. Toxicol. Appl. Pharmacol. 26: 264–273 (1973).
48. Brar, B. S., Traitor, D. E., Boshart, C. R., and Noble, J. F. A laboratory aerosol system for conducting inhalation toxicology studies. Paper presented at 14th Annual Meeting, Society of Toxicology, Williamsburg, VA, March 1975.
49. Mauderly, J. L., and Tesarek, J. E. Effects of current aerosol

exposure methods on the pulmonary function of beagle dogs and Syrian hamsters. In: Inhalation Toxicology Research Institute Annual Report 1972–1973, (R. O. McClellan, Ed.), LF-46, Lovelace Foundation, Albuquerque, NM,,1973, pp. 163–168.
50. Smith, D. M., Ortiz, L. W., Archuleta, R. F., Thomas, R. G., Tillery, M. I., and Ettinger, H. J. A method for chronic "nose-only" exposures of laboratory animals to inhaled fibrous aerosols. Paper presented at the Symposium on Inhalation Toxicology and Technology, The UpJohn Co., Kalamazoo, MI, October 1980.
51. Auerbach, O., Hammond, E. C., Kirman, D., and Garfinkel, L. Effects of cigarette smoking on dogs. Arch. Environ. Health 21: 754–768 (1970).
52. Phalen, R. F., and Morrow, P. E. Experimental inhalation of metallic silver. Health Phys. 24: 509–518 (1973).
53. Bernstein, D. M., Drew, R. T., and Kuschner, M. The deposition, translocation, and fate of sized man-made mineral fibers in rats. Report submitted to the Thermal Insulation Manufacturers Association, BNL Informal Report No. 28994, Brookhaven National Laboratory, Upton, NY, 1980.
54. Bianco, A., Gibb, F. R., Kilpper, R. W., Landman, S., and Morrow, P. E. Studies of tantalum dust in the lungs. Radiology 112: 549–556 (1974).
55. Thilenius, O. G., and Vial, C. B. Chronic tracheostomy in dogs. J. Appl. Physiol. 18: 439–440 (1963).
56. Baker, M. A., Chapman, L. W., and Nathanson, M. Control of brain temperature in dogs: effects of tracheostomy. Respir. Physiol. 22: 325–333 (1974).