Environmental Health Perspectives
Vol. 64, pp. 179-184, 1985

Free Radical-Mediated Activation of Hydrazine Derivatives

by B. Kalyanaraman* and B. K. Sinha†

Hydrazines are known to undergo oxidative activation in several enzymatic systems *in vitro*. Free radicals or carbonium ions have been proposed as active intermediates during such activation. The toxic effects elicited by hydrazines have also been linked to free radical-mediated activation. In this report, we have reviewed the identification of organic free radicals from hydrazines by direct ESR and ESR-spin trapping.

Introduction

Hydrazines are found naturally in plants (*1*). In the environment their occurrence is widespread, as they are used as herbicides, rocket fuels, and chemical intermediates (*1*). They find use in medicine as antitumor drugs, antidepressants, and as antihypertensive agents (*1*). However, the therapeutic effects are often complicated by adverse side effects such as hepatic necrosis and rheumatoid arthritis (*2,3*). Some hydrazines have been shown to be tumorigenic and mutagenic (*3*). Most metabolism studies link these effects to the production of reactive intermediates (i.e., free radicals and carbonium ions) (*4–6*). Hydrazines also exhibit organospecificity suggesting the involvement of several activating enzymes (*1*). A complete review of the biochemical toxicology of hydrazines has been given by Moloney and Prough (*3*). The present review deals specifically with the production and identification of organic free radicals in biochemical systems and their implications in the biochemical toxicology of hydrazines.

Radical Generation and Identification

Free radicals from hydrazines can be generated *in vitro* by both one- and two-electron oxidations (*7*). The stability of the radical derived depends on the substituents: whereas the primary radical cation of tetrasubstituted hydrazines can be observed by direct ESR (electron spin resonance) under static conditions, the radical cation from the trisubstituted hydrazine undergoes dehydrogenation, forming the less stable hydrazyl radical (Fig. 1). Similarly, with the mono- and disubstituted hydrazines, the cation radicals are too unstable to be observed under static conditions, although they have been detected under flow conditions in chemical systems (*8*). However, one can detect the secondary radicals formed in these systems under static conditions. The secondary radicals can be formed from decomposition of primary radical cation or directly by two-electron oxidation of the parent hydrazine (*3,7*). Direct ESR is the method of choice for detecting the stable radical cations (*7*) and the less stable hydrazyl and (secondary) carbon-centered radicals are detected by ESR-spin trapping (*9,10*).

Free radicals from hydrazines can occur in a variety of oxidizing systems containing metal ions, oxyhemoglobins, horseradish peroxidase/hydrogen peroxide, prostaglandin synthase/arachidonic acid, cytochrome P-450/NADPH, and neutrophil-derived oxidants.

Metal-Catalyzed Autoxidation

It was shown in the past that hydrazine enhanced the rate of decomposition of cumene hydroperoxide while also quantitatively converting it to acetophenone in the presence of Fe(III)EDTA complex (*10*).

$$N_2H_4 + \text{Fe(III)EDTA} \rightarrow N_2H_3^{\cdot} + \text{Fe(II)EDTA} + H^+$$
$$\text{Fe(II)EDTA} + \text{ROOH} \rightarrow \text{RO}^{\bullet} + \text{Fe(III)EDTA} + OH^-$$
$$(\text{R} = \text{Cumene})$$

Several reports on metal-catalyzed one-electron oxidation of hydrazines have now appeared (11–16). Free radicals (i.e., the hydrazyl radicals) formed during such reactions have now been spin trapped (Table 1) (*14,15*).

$$M^{n+} + RNHNH_2 \rightarrow M^{(n-1)+} + RNHNH^{\cdot} + H^+$$
$$(M^{n+} = Cu^{2+}, Fe^{3+}, Mn^{3+}, \text{etc.})$$

*Department of Radiology, National Biomedical ESR Center, Medical College of Wisconsin, 8701 Watertown Plank Road, Milwaukee, WI 53226.
†Laboratory of Clinical Pharmacology, National Cancer Institute, National Institutes of Health, Bethesda, MD 20205.

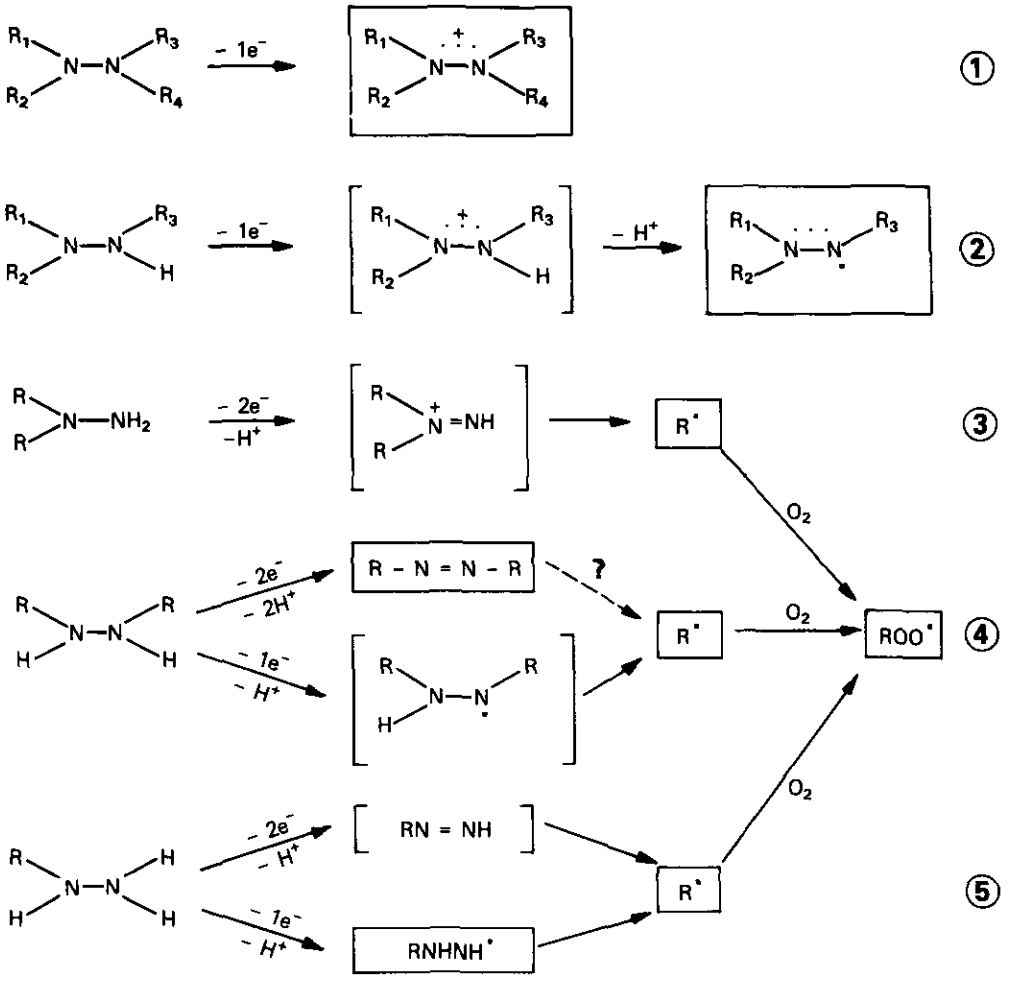

FIGURE 1. Free-radical activation of hydrazines and formation of reactive intermediates.

Oxidation of Hydrazines by Hemoglobins in Erythrocytes

Phenylhydrazine is the prototype of drugs known to induce hemolysis in red blood cells. The phenyl radical formed during oxidation of phenylhydrazine by hemoglobin was detected by spin trapping (*26*) and the structure of the spin adduct verified by mass spectrometry (Table 1) (*26*). Of interest also is the trapping of a lipid radical formed as a result of hydrogen abstraction by phenyl radicals (*27*). Phenyl radicals were also shown to covalently bind to the heme (*23*). A complete summary of research in this area has been given by Mason (*10*.

Horseradish Peroxidase/Hydrogen Peroxide

It has been reported that iproniazid and other hydrazines react covalently and stochiometrically with the non-heme portion of HRP (horseradish peroxidase) causing time-dependent inactivation of the enzyme (*29,30*). Nevertheless, this system has been shown to oxidize a number of hydrazines via radical intermediates (*17,20,21*). Tetramethylhydrazine (TMH) was oxidized via the radical cation intermediate to formaldehyde (*17*). An interesting aspect of this peroxidatic oxidation is the fact that TMH underwent sequential one-electron oxidation catalyzed by HRP/H_2O_2. Perhaps the most interesting aspect of HRP/H_2O_2-induced activation of hydrazines is oxygen activation caused by secondary carbon-centered radicals (*20*). In the presence of oxygen, alkyl peroxyl radicals have been spin-trapped (*20*); purging the system with N_2 caused the disappearance of the ESR spectrum of peroxyl adduct which was replaced by that of DMPO-alkyl adduct (Fig. 2).

Prostaglandin Synthase/Arachidonic Acid

The PG-hydroperoxidase component present in PG-synthase has been shown to catalyze the reduction of PGG_2 to PGH_2 while also oxidizing a number of xenobiotics (*31*). This activity also was responsible for free radical-mediated metabolism of tetramethylhydrazine (*18,19*). The production of radical cation (Fig. 3) cor-

Table 1. Production and identification of organic free radicals from hydrazines.

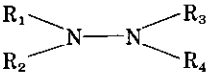

Hydrazine	Hydrazine substituents R_1	R_2	R_3	R_4	Activating system[a]	Spin trap[b]	Radical detected	Reference
Tetramethylhydrazine[c]	$-CH_3$	$-CH_3$	$-CH_3$	$-CH_3$	HRP/H_2O_2 RSV/AA	—	Radical cation	(*17,18*)
Tetraphenylhydrazine[c]	$-C_6H_5$	$-C_6H_5$	$-C_6H_5$	$-C_6H_5$	HRP/H_2O_2	—	Radical cation	(*19*)
Isoniazid	$-COC_5H_4N$	H	H	H	RSV/AA MS/NADPH HRP/H202	DMPO	$^{\cdot}C_5H_4N$ $^{\cdot}COC_5H_4N$	(*20*)
Iproniazid	$-COC_5H_4N$	H	H	$-CH(CH_3)_2$	HRP/H_2O_2 RSV/AA	MNP DMPO DMPO	$^{\cdot}CH(CH_3)_2$ $^{\cdot}OOCH(CH_3)_2$ $^{\cdot}C_6H_4N$, COC_5H_4N	(*20*)
Procarbazine	$-CH_3$	H	H	$-CH_2C_6H_4CONHCH(CH_3)_2$	HRP/H_2O_2 RSV/AA MS/NADPH	MNP DMPO	$^{\cdot}CH_3$ $^{\cdot}CH_2C_6H_4CONHCH(CH_3)_2$ $^{\cdot}OOCH_3$, $^{\cdot}CH_3$	(*21*)
Hydralazine[d]	(R)	H	H	H	HRP/H_2O_2 RSV/AA Metal ions	DMPO	$^{\cdot}NHNHR$	(*14,15,20*)
Ethylhydrazine	$-C_2H_5$	H	H	H	MS/NADPH	PBN	$^{\cdot}C_2H_5$	(*16*)
Acetylhydrazine	$-COCH_3$	H	H	H	Metal Ions Hepatocytes	PBN DMPO	$^{\cdot}COCH_3$	(*16,22*)
Phenylhydrazine[d]	$-C_6H_5$	H	H	H	Oxy-Hb RSV/AA HOCl/$^{-}$OCl	DMPO	$^{\cdot}C_6H_5$	(*20,23*)
2-Phenylethylhydrazine[d]	$-CH(CH_3)C_6H_5$	H	H	H	MS/NADPH Oxy-Hb	4-POBN PBN	$^{\cdot}CH(CH_3)C_6H_5$	(*24,25*)
Benzylhydrazine[d]	$-CH_2C_6H_5$	H	H	H	MS/NADPH	4-POBN	$^{\cdot}CH_2C_6H_5$	(*24*)

[a] RSV = ram seminal vesicles; MS = microsomes (rat liver); AA = arachidonic acid.
[b] DMPO = 5.5-dimethyl-1-pyroline N-oxide; MNP = 2-methyl-2-nitrosopropane.
[c] Stable radical cations detected by direct ESR.
[d] Spin adducts verified by mass spectrometry.

responded closely to that of formaldehyde. ESR-spin trapping has allowed the detection of the hydralazyl radical derived from activation of hydralazine by PG-synthase/AA (*20*) (Fig. 4). The significance of this metabolizing system can be linked to the fact that the target organs (e.g., blood vessels, kidney, and lung) of hydrazine-induced tumorigenicity are all rich in PG-synthase activity (*18*).

Cytochrome P-450/NADPH

Free radicals have been detected (by spin trapping) during microsomal and subcellular metabolism of several monosubstituted hydrazines (*20–22,24*). The spin adducts were characterized either by mass spectrometry (*24*) or by comparison with those spin adducts formed in a purely chemical system (*14*). Sensitivity to carbon monoxide indicated the involvement of cytochrome P-450 (*22*). It is not clear at present whether these radicals are produced by *N*-hydroxylation followed by dehydration or by an hydroxyl radical-dependent oxidation (*32*). In either case, the corresponding diazene intermediate is most likely to be formed. In most cases, the activity of cytochrome P-450 decreased during the course of hydrazine metabolism (*33*).

Neutrophil-Derived Oxidants

Stimulated neutrophils generate HOCl/$^{-}$OCl as an integral part of their microbial metabolism (*34*). HOCl is converted into a stable taurine chloramine in the presence of taurine (neutrophils contain relatively large amounts of taurine). We found that the taurine chloramine oxidizes phenylhydrazine to phenyl radicals which were spin-trapped (*35*). Azide (a myeloperoxidase inhibitor) inhibited formation of the DMPO-phenyl spin adduct while superoxide dismutase did not have any effect. Oxidation of phenylhydrazine by stimulated neutrophils may thus represent a new pathway for metabolism of hydrazines.

Implications of Free Radicals in the Biochemical Toxicology of Hydrazines

Some biological end points that suggest free radical production during hydrazine metabolism are covalent binding (*36,37*), lipid peroxidation (*38,39*), DNA damage (unscheduled DNA synthesis) (*40*), hydrocarbon production (*41,42*), and heme alkylation/arylation (*24,28*). The hepatic necrosis elicited during therapeutic administration of isoniazid and iproniazid has been attributed to covalent binding of acetyl and isopropyl radicals (to proteins) formed from hydrazines that were liberated metabolically (*3–5*). Procarbazine and hydralazine, when fortified with microsomes and NADPH were found to covalently bind to proteins, quite possibly via free radical intermediates (*36,37*).

Hydrocarbon evolution was detected during metab-

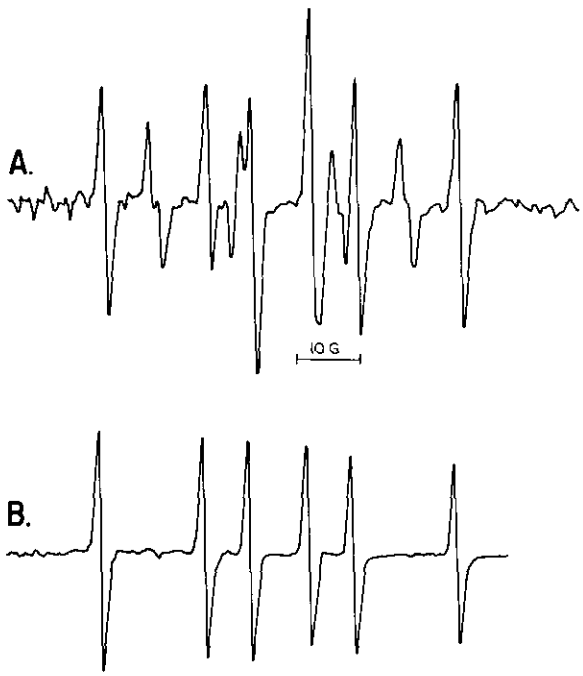

FIGURE 2. ESR spectrum obtained from 1 mM iproniazid with incubation (*A*) in air and (*B*) under N_2. Incubation was with horseradish peroxidase (1 mg/mL), H_2O_2 (400 mM) and DMPO (100 mM) in the presence of 1 mM diethylenetriaminepentaacetic acid at pH 7.4 with a^N = 16.1 G, a^H_β = 24.4 G (DMPO-carbon centered spin adduct) and a^N = 14.7 G, a^H_β = 11.5 G, and a^H_γ = 1.1 G (DMPO-peroxyl spin adduct).

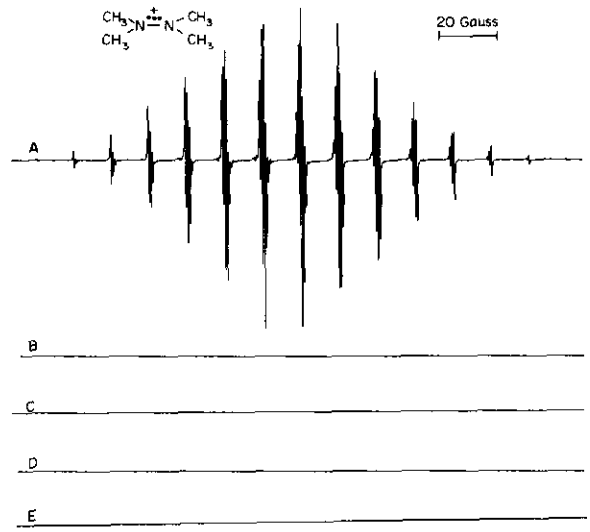

FIGURE 3. Arachidonic acid-dependent oxidation of TMH: (*A*) ESR spectrum of an incubation containing 87 mM TMH, 200 μM arachidonic acid and 2 mg protein in 1 mL of Tris buffer (pH 7.4). The reaction was initiated at room temperature by the addition of arachidonic acid. The mixture was bubbled with O_2 for a minute prior to the addition of arachidonic acid. (*B*) as in (*A*), except that arachidonic acid was omitted. (*C*) as in (*A*), except that the enzyme was preincubated with 400 μM indomethacin for 2 min prior to the addition of arachidonic acid. (*D*) as in (*A*), except that the incubation mixture described in (*A*) was bubbled with N_2 for 5 min prior to the addition of arachidonic acid. (*E*) as in (*A*), except that the enzyme was denatured by heating for 10 min in boiling water prior to the addition of arachidonic acid.

olism of several hydrazines: propane from iproniazid (*4,5*), ethyl benzene from phenelzine (*24*), benzene from phenylhydrazine, and methane from methylhydrazine and procarbazine (*37*). The precursor alkyl radicals could conceivably abstract an hydrogen atom, forming the various hydrocarbons (Table 1) (*3*). With some hydrazines, incubation with thiols increased the production of hydrocarbons (by hydrogen abstraction), while reducing the covalent binding.

$$R\bullet + GSH \rightarrow RH + GS\bullet$$

Peroxidation of red cell membrane lipids has been induced in different amounts *in vivo* during the administration of the following hydrazines: phenylhydrazine > acetylphenylhydrazine > hydrazine (*38*). The organic free radicals probably contribute to the lipid peroxidation to a certain extent. The lipid radical produced during the metabolism of phenylhydrazine by erythrocytes has been detected; spin traps also inhibit lipid peroxidation presumably via trapping of the lipid or the phenyl radical (*27*).

Reactive oxygen species have been implicated in hydrazine-induced inactivation of transforming DNA and also in the unscheduled DNA synthesis found in repair-deficient xeroderma pigmentosum cells following treatment with isoniazid and metals (*40*). However, the possible involvement of organic free radicals was not discussed. Recently, it was shown that the carbon-centered free radical (e.g., 2-phenylethyl radical) specifically interacted with the DNA apparatus, causing single-strand breaks (nicks) in DNA, and that this action was inhibited by the spin trap (*25*).

During the microsomal metabolism of hydrazines inactivation of cytochrome P-450 occurs; carbon-centered

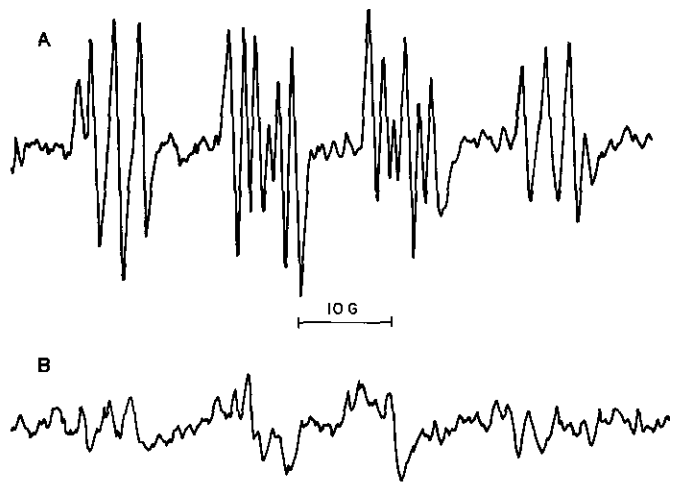

FIGURE 4. ESR spectrum obtained from 2 mM hydralazine with (*A*) incubation was with 1 mg/mL RSV microsomes, 400 μM AA, 100 mM DMPO, in the presence of 1.0 mM diethylenetriaminepentaacetic acid (DETAPAC), at pH 7.6; (*B*) identical with (*A*) except that the RSV microsomes were preincubated with 400 μM indomethacin.

radical derived from the hydrazines presumably add to the heme frame-work resulting in the formation of *N*-alkylheme adducts. Isolation and identification of *N*(2-phenylethyl) protoporphyrin IX and *N*-phenylprotoporphyrin IX isolated during metabolism of phelezine and phenylhydrazine support the interraction of 2-phenylethyl and phenyl radicals, respectively, with the heme.

This work was supported by National Institutes of Health Grant RR-01008.

REFERENCES

1. Schmeltz, I., Hoffmann, D., and Toth, B. Hydrazines: occurrence, analysis, and carcinogenic activity as related to structure. In: Symposium on Structural correlation of Carcinogenesis and Mutagenesis; a Guide to Testing Priorities. (I. M. Asher and C. Zervos, Eds., 1977, pp. 172–178.
2. Mitchell, J. R., Zimmerman, H. J., Ishak, K. G., Thorgeirsson, U. P., Timbrell, J. A., Snodgrass, W. R., and Nelson, S. D. Isoniazide liver injury: clinical spectrum, pathology and probable pathogenesis. Ann. Intern. Med. 84: 181–192 (1976).
3. Moloney, S. J., and Prough, R. A. Biochemical toxicology of hydrazines. In: Reviews in Biochemical Toxicology, Vol. 5 (E. Hodgson, J. R. Bend, and R. M. Philpot, Eds.), Elsevier Biomedical, New York, 1983, pp. 313–348.
4. Nelson, S. D., Mitchell, J. R., Timbrell, J. A., Snodgrass, W. R. and Corcoran, G. G. Isoniazid and iproniazid: activation of metabolites to toxic intermediates in man and rat. Science 193: 901–903 (1976).
5. Timbrell, J. A., Mitchell, J. R., Snodgrass, W. R., and Nelson, S. D. Isoniazid hepatoxicity: the relationship between covalent binding and metabolism *in vivo*. J. Pharmacol. Exptl. Therap. 213: 364–369 (1980).
6. Nelson, S. D., Mitchell, J. R., Snodgrass, W. R., and Timbrell, J. A. Hepatoxicity and metabolism of diiproniazid and isopropylhydrazine. J. Pharmacol. Exptl. Therap, 206: 574–585 (1978).
7. Nelson, S. F. Early intermediates in hydrazine oxidations: hydrazine cation radicals, hydrazyls, and diazenium cations. In: Organic Free Radicals (ACS Symposium Series 69) (W. A. Pryor, Ed.), American Chemical Society, Washington, DC, 1978, pp. 309–320.
8. Adams, J. A., and Thomas, J. R. Electron paramagnetic resonance of a hydrazine radical ion. J. Chem. Phys. 39: 1904–1906 (1963).
9. Kalyanaraman, B. Detection of toxic free radicals in biology and medicine. In: Reviews in Biochemical Toxicology, Vol. 4 (E. Hodgson, J. R. Bend and R. M. Philpot, Eds.), Elsevier Biomedical, New York, 1982, pp. 73–139.
10. Mason, R. P. Spin trapping free radical metabolites of toxic chemicals. In: Spin Labelling in Pharmacology (J. L. Holtzman, Ed.), in press.
11. Meehan, E. J., Kolthoff, I. M., Auerbach, C., and Minato, H. Reaction of cumene hydroperoxide with hydrazine induced by the reaction between iron (III) EDTA and hydrazine. J. Am. Chem. Soc. 83: 2232–2234 (1961).
12. Lim, P. K., and Fagg, B. S. Manganese-catalyzed autoxidation of aqueous hydrazine: kinetics, mechanism, and catalyst-inhibitor conversion. J. Phys. Chem. 88: 1136–1140 (1984).
13. Misra, H. P., and Fridovich, I. The oxidation of phenylhydrazine: superoxide and mechanism. Biochemistry 15: 681–687 (1976).
14. Sinha, B. K., and Motten, A. G. Oxidative metabolism of hydralazine. Evidence for nitrogen-centered radicals formation. Biochem. Biophys. Res. Commun. 105: 1044–1051 (1982).
15. Sinha, B. K., and Patterson, M. A. Free radical metabolism of hydralazine. Binding and degradation of nucleic acids. Biochem. Pharmacol. 32: 3279–3284 (1983).
16. Augusto, O., and Ortiz de Montellano, P. R. Spin-trapping of free radicals formed during microsomal metabolism of ethylhydrazine and acetylhydrazine. Biochem. Biophys. Res. Commun. 101: 1324–1330 (1981).
17. Kalyanaraman, B., Mason, R. P., and Sivarajah, K. An electron spin resonance study of a novel radical cation produced during the horseradish peroxidase-catalyzed oxidation of tetramethylhydrazine. Biochem. Biophys. Res. Commun. 105: 217–224 (1982).
18. Kalyanaraman, B., Sivarajah, K., Eling, T. E., and Mason, R. P. A free radical mediated cooxidation of tetramethylhydrazine by prostaglandin hydroperoxidase. Carcinogenesis 4: 1341–1343 (1983).
19. Kalyanaraman, B., and Sivarjah, K. The electron spin resonance study of free radicals formed during the arachidonic acid cascade and cooxidation of xenobiotics by prostaglandin synthase. In: Free Radicals in Biology, Vol. 6 (W. A. Pryor, Ed.), Academic Press, New York, 1984, pp. 149–198.
20. Sinha, B. K. Enzymatic activation of hydrazine derivatives. A spin trapping study. J. Biol. Chem. 258: 796–801 (1983).
21. Sinha, B. K. Metabolic activation of procarbazine. Evidence for carbon-centered free radical intermediates. Biochem. Pharmacol. 33: 2777–2781 (1984).
22. Albano, A. T. E., Vannini, V., and Dianzani, M. U. Spin trapping of a free radical reactive intermediate during isoniazid metabolism in isolated hepatocytes. IRCS Med. Sci. 11: 851–852 (1983).
23. Hill, H. A. O., and Thornalley, P. J. Phenyl radical production during the oxidation of phenylhydrazine and in phenylhydrazine-induced haemolysis. FEBS Letters 125: 235–238 (1981).
24. Ortiz de Montellano, P. R., Augusto, O., Viola, F., and Kunze, K. L. Carbon radicals in the metabolism of alkyl hydrazines. J. Biol. Chem. 258: 8623–8629 (1983).
25. Augusto, O., Faljoni-Alario, A., Leite, C. C. C., and Nobrega, F. G. DNA strand scission by the carbon radical from 2-phenylethylhydrazine metabolism. Carcinogenesis 5: 781–784 (1984).
26. Winder, F. G., and Denneny, J. M. Metal-catalyzed auto-oxidation of isoniazid. Biochem. J. 73: 500–507 (1959).
27. Hill, H. A. O., and Thornalley, P. J. The effect of spin traps on phenylhydrazine-induced haemolysis. Biochim. Biophys. Acta 762: 44–51 (1983).
28. Augusto, O., Kunze, K. L., and Ortiz de Montellano, P. N-Phenylprotoporphyrin IX formation in the hemoglobin-phenylhydrazine reaction. Evidence for a protinstabilized iron-phenyl intermediate. J. Biol. Chem. 257: 6231–6241 (1982).
29. Hidaka, H., and Udenfriend, S. Evidence of a hydrazine-reactive group at the active site of the nonheme portion of horseradish peroxidase. Arch. Biochem. Biophys. 140: 174–180 (1970).
30. Fridovich, I. The stimulation of horseradish peroxidase by nitrogenous ligands. J. Biol. Chem. 238: 3921–3927 (1963).
31. Marnett, L. J. Hydroperoxide-dependent oxidations during prostaglandin biosynthesis In: Free Radicals in Biology, Vol. 6 (W. A. Pryor, Ed.), Academic Press, New York, 1984, pp. 63–94.
32. Winston, G. W., and Cederbaum, A. I. NADPH-dependent production of oxy radicals by purified components of the rat liver mixed function oxidase system-II. Role in microsomal oxidation of ethanol. J. Biol. Chem. 258: 1514–1519 (1983).
33. Hines, R. A., and Prough, R. A. The characterization of an inhibitory complex formed with cytochrome P-450 and a metabolite of 1,1-disubstituted hydrazines. J. Pharm. Exp. Therap. 214; 80–86 (1980).
34. Weiss, S. J., Klein, R., Slivka, A., and Wei, M. Chlorination of taurine by human neutrophils; evidence for hypochlorous acid generation. J. Clin. Invest. 70: 598–607 (1982).
35. Kalyanaraman, B., and Sohnle, P. G. Generation of free radical intermediates from foreign compounds by neutrophil-derived oxidants. J. Clin. Invest. 75: 1618–1622 (1985).
36. Streeter, A. J., and Timbrell, J. A. Enzyme-mediated covalent binding of hydralazine to rat liver microsomes. Drug Metab. Dispos. 11: 179–183 (1983).
37. Prough, R. A., Coomes, M. W., Cummings, S. W., and Wiebkin, P. Metabolism of procarbazine [*N*-isopropyl-α-(2-methylhydrazino)-*p*-toluamide HCl)]. Adv. Exp. Med. Biol. 136B: 983–996 (1982).
38. Goldberg, B., and Stern, A. The mechanism of oxidative hemolysis produced by phenylhydrazine. Molec. Pharmacol. 13: 832–839 (1977).
39. Jain, S. K., and Hochstein, P. Generation of superoxide radicals by hydrazine. Its role in phenylhydrazine-induced hemolytic ane-

mia. Biochim. Biophys. Acta 586: 128–136 (1979).
40. Whiting, R. F., Wei, L., and Stich, H. F. Enhancement by transition metals of unscheduled DNA synthesis induced by isoniazid and related hydrazines in cultured normal and xeroderma pigmentosum human cells. Mutat. Res. 62: 505–515 (1979).
41. Dunn, D. L, Lubet, R. A., and Prough, R. A. Oxidative metabolism of *N*-isopropyl-α-(2-methylhydrazino)-*p*-toluamide hydrochloride (procarbazine) by rat liver microsomes. Cancer Res. 39: 4555–4563 (1979).
42. Weinkam, R. J., and Shiba, D. A. Metabolic activation of procarbazine. Life Sci. 22: 937–946 (1978).