Environmental Health Perspectives
Vol 90, pp. 229-238, 1991

Use of Biological Markers and Pharmacokinetics in Human Health Risk Assessment

by Dale Hattis*

There are two reasons to connect discussions of biological markers and pharmacokinetics. First, both tend to open up the black box between exposure and effect. Doing this promises more complete scientific understanding than simple input-output analysis, the possibility of better mechanism-based projection of risk beyond the range of possible direct observations, and the possibility of greater sensitivity of analysis, in some cases going from the organism to the cell as the unit of analysis. Second, pharmacokinetic (or similar pharmacodynamic) analysis will often be essential for appropriate interpretation of biological marker information. One needs some sort of dynamic model of the generation and loss of the marker in relation to exposure in order to use a biological marker, either to form a better measure of dosage (either accumulated past dose, or biologically relevant dose), or to make an improved prediction of effect. (For example, the use of a blood cadmium level alone to predict kidney effects might be inferior to predictions based on aggregate past accumulation of cadmium in the kidney, based on the past history of cadmium blood levels × time). Several examples will be discussed of the use of biomarkers and pharmacokinetics in risk assessments for both carcinogenesis and other effects.

Introduction

There is an inescapable connection between the construction of dynamic models of pathological processes and the use of biomarkers, parameters that putatively represent some step along the causal pathway between exposure and effect. Implicitly or explicitly, any use of a biomarker in a risk assessment requires one to make some sets of quantitative dynamic assumptions about both the relationship between exposure and the biomarker and the relationship between the biomarker and the ultimate health consequences of interest. At the same time, any construction of a dynamic model for use in risk assessment must remain a theoretical exercise until specific predictions about the relationships of intermediate parameters to exposure and/or effect can be verified.

Philosophy of Science Issues

There are three basic reasons why it is desirable to use both models and markers to open up the black box between exposure and effect. The use of model and markers *a*) lead to a more complete scientific understanding and incorporate more relevant information about causal mechanisms than a simple input-output analysis; *b*) offers the eventual prospect of better mechanism-based projection of risk beyond the range of possible direct observations; and *c*) offers the possibility of greater sensitivity of detection and quantification of adverse effects in some cases, going from the organism to the cell as the unit of analysis.

*M.I.T. Center for Technology, Policy and Industrial Development, E-40-227, Massachusetts Institute of Technology, Cambridge, MA 012139.

Realizing the potential of both biomarkers and pharmacokinetic modeling, however, requires overcoming some philosophical assumptions that are common in the scientific disciplines that must contribute the tools for both measuring biomarkers and studying health effects in human populations. On the one hand, experimental scientists in Baconian tradition (*1*) are reluctant to build elaborate mathematical models, having been conditioned to view such theoretical efforts as unproductive speculations that divert attention from the necessary job of making measurements of natural phenomena as they really are (*2*). On the other hand, more mathematical/statistical workers, who have largely been in control of risk assessment procedures up to this point, often do not have the detailed familiarity with causal mechanisms to feel comfortable building realistic mechanism-based representations of complex biological processes. In any event, doing so would complicate the use of their usual black box curve-fitting approaches to analysis, introducing more variables than can be directly estimated from any single data set and therefore requiring relatively innovative (from a statistical standpoint) procedures to incorporate diverse information from different sources.

This paper will advance what may be a startling proposition to experimentalists: by uncovering anomalies in the fit between data and theory, analysis can be as fruitful in producing new knowledge in some cases as additional data gathering. Theoretical modeling and data-gathering activities can properly be thought of as complementary and synergistic enterprises in science.

Table 1 summarizes a series of risk assessment studies undertaken at MIT in recent years, primarily under the auspices of a

Table 1. Examples of the use of intermediate parameters ("biomarkers") in assessing risks for various end points.

Agent	Intermediate parameter	Ultimate end point	Reference
Perchloroethylene	Metabolized dose/body weight $^{3/4}$	Carcinogenesis	(3)
Butadiene	Metabolized dose/body weight $^{3/4}$	Carcinogenesis	(4)
Ethylene oxide	Internal concentration X time	Carcinogenesis	(5)
Acrylamide	Accumulated damage (inhibition of retrograde axonal transport?)	Neurotoxic effects from dying back axonopathy	(6)
Glycol ethers	Sperm count	Reduced male fertility	(7,8)
Glycol ethers	Birth weight	Infant mortality	(9)
Acid particles	Particle number deposited in tracheobronchial region with sufficient acid content	(Possible contributions to chronic bronchitis?)	(10)
Coal dust	FEV_1	Morbidity and mortality from chronic obstructive lung disease	(in process)

cooperative agreement with the National Institute for Occupational Safety and Health. The institutional conrext is mentioned to emphasize that these studies are directed at a practical aim—to respond to judicial requirements (from the Supreme Court's benzene decision among others) that regulators do the best they reasonably can to assess the magnitude of the risk posed by the substances under consideration for regulation, and the prospective benefits of the regulatory actions they propose.

Because the work is intended in part to serve decision-making, and because as a society we must necessarily make decisions on the control and acceptance of risk based on currently incomplete information, the use of different biomarkers and models should not be construed as an assertion that either we know everything we would ultimately like to know about the quantitative causal relationships implied, or, the markers and models are fully scientifically validated. Rather the tests that should be applied in deciding whether a particular model or marker is appropriate for provisional use in risk assessment are: *a*) Does the model or marker, by incorporating additional relevant information on likely causal processes, help to better clarify the "range of not clearly incorrect estimates" (*11*) on the magnitude of the risks under study, thereby helping the risk managers and their constituents to appreciate the potential consequences of their actions under alternative, reasonably possible, states of the world? *b*) Can the model or marker serve as a useful point of departure for further scientific research making specific predictions about measurable parameters that can be tested in future experimental or epidemiological efforts?

The presentation of these examples below necessarily focuses on only a few highlights of what has been learned in confronting the detailed analysis issues. The full reports tend to be book-length documents, which are difficult to publish in the shortened form required by most scientific journals. The length of full reports results from an attempt to explore new methodology, and because to serve the decision-making function outlined above, the studies must include extensive analyses of the sensitivity of the conclusions to different structural assumptions and plausible values of key model parameters. Very often, all this simply will not fit within 20 pages even for one study, and it is even less feasible to do this for the range of studies listed in Table 1.

Use of Pharmacokinetics and Biological Markers to Improve Carcinogenesis Risk Assessment

One general goal of the three carcinogenesis case studies was to improve high-dose/low-dose interpolation. Through the use of better measures of the internal dose of DNA-alkylating substances at different external exposure levels, we hoped to avoid attributing high-dose pharmacokinetic nonlinearities to the fundamental multiple mutation mechanism of carcinogenisis. Another goal of these studies was to improve interspecies projection of risk.

The perchloroethylene and butadiene analyses attempt to quantify the metabolism of these substances to active epoxy intermediates, thus the intermediate parameter of interest is a function of metabolized dose. By now the basic structure of such models, where high-dose nonlinearities are assumed to result from saturation of a single liver enzyme with Michaelis-Menten enzyme kinetics (Fig. 1) is relatively familiar. For ethylene oxide, a preformed epoxide alkylating agent, the challenge was to determine the rates of detoxifying metabolism for different species and at different exposure rates and thus quantify the internal dose × the substance available for DNA reaction.

In the cases of perchloroethylene and ethylene oxide, the metabolism models were calibrated with the aid of independent data for all three species of interest (mice, rats, and humans). One necessary caveat, however, is that the important issue of the appropriate dose metric for risk per unit of active metabolites × time after pharmacokinetic analysis is still not settled. For the best-estimates of risk, a metabolized dose/(body weight)$^{3/4}$ projection rule is used because this best fits the rat/mouse carcinogenic risk data for perchloroethylene and because it conforms with an assumption first articulated by Boxenbaum (*12*) that the active elimination of toxic substances should scale with body weights in parallel with general metabolic rates. This leads to an expectation that half-lives for elimination in larger animals should increase in proportion to (body weight)$^{1/4}$.

This specific expectation on elimination rates was fulfilled by the results of a the modeling for ethylene oxide. The estimated half-lives for elimination of ethylene oxide were estimated as 6.4, 9.2, and 41 min in mice, rats, and humans, respectively, for the best-estimate series of models. When fit to a standard allometric equation (*13*),

$$T_{1/2} = K\,(\text{body weight})^m$$

the exponent m was estimated at 0.24, not very different from the value of 0.25 which would be expected from the metabolic rate scaling rule. When this regression equation in turn was used to make a prediction for a result not included in the original analysis, the half-life for 17.5-kg beagle dogs as studied by Martis

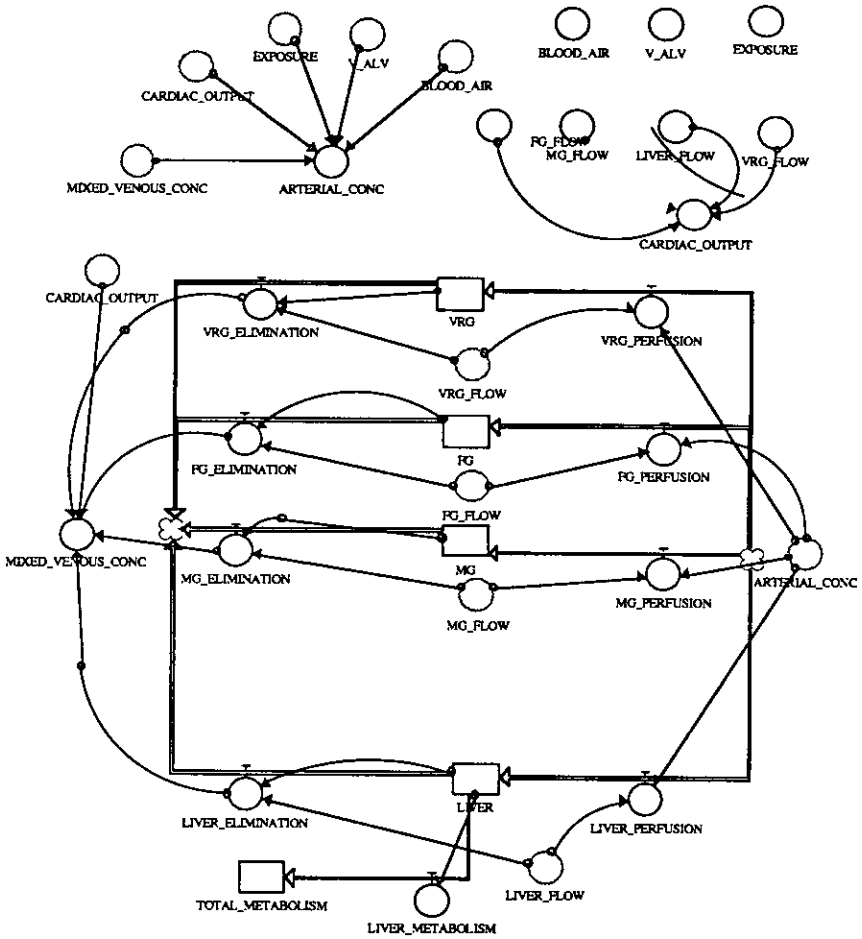

FIGURE 1. Basic rat perchloroethylene pharmacokinetic model with administration by gavage.

and co-workers (*14*), the expectation was for a half-life of 28.4 min. Martin et al.'s actual findings were half-lives of 29.3 ± 5.7 min and 36.5 ± 18.5 min (SD) after IV administration of 25 and 75 mg/kg dose levels.

One of the important lessons from our work was the high frequency with which we found it necessary to modify or elaborate the standard pharmacokinetic model design represented in Figure 1 to accommodate the facts and data types available in specific cases. An earlier report (*15*), described some distinctive features of our human perchloroethylene models that were required to accommodate both the extensive alveolar air exhalation data of Stewart et al. (*16*) and the metabolite urinary excretion data for human workers. Further unanticipated assumptions were required to interpret data from available metabolic disposition experiments in animals: assumptions about gastrointestinal absorption rates were required for interpretation of gavage experiments, and assumptions about the rate of loss of metabolized material were required for interpretation of experiments in which the compound was administered by inhalation over an extended (6 hr) period. The difficulties in interpreting the animal data as published indicate that if modeling were undertaken in conjunction with the data collection, the experiments might be alerted by the need to make additional or slightly different measurements that would make the data more useful. The rather large (5-fold) discrepancies that we found in comparing the low-dose implications of the two worker studies of metabolite excretion (*17,18*) indicate that the modeling exercise, by bringing diverse data together under a common analytical umbrella, can serve to identify inconsistencies among different data sets (puzzles that might be usefully resolved by additional observations). In this case, the authors of the later paper (*18*) failed to comment on the difference between their results and those of the earlier researchers, even though the author groups for the two papers have at least one name in common.

At the outset, after completing the perchloroethylene model, we thought that the ethylene oxide modeling effort would be very straightforward. However, there were two major surprises. The first major surprise was that rat absorption and excretion data for ethylene oxide (*19*) were only interpretable, whatever model structure and parameters we tried, if breathing rates declined at relatively high doses (100 and 1000 ppm). The experimenters in this case noted gasping and other signs of lung distress at the 1000 ppm level, and based on the experience of Alarie and co-workers (*20,21*), it is entirely reasonable to have expected that high levels of an irritant gas would tend to reduce respiration. Here, however, is another case where only our modeling revealed a

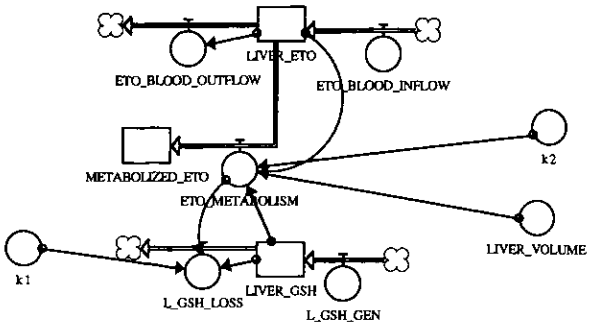

FIGURE 2. Conceptual model of ethylene oxide metabolism in the liver.

primary implication of the data and, of course, the desirability of having measurements, rather than a need to estimate, this important constant, which turned out to be a vanable.

The second surprise that caused us to even more radically restructure our ethylene oxide model was an extensive body of evidence of glutathione depletion in different organs at high dose rates (*22*). This in itself would be expected to decrease the metabolism rate of ethylene oxide at high doses whether or not there was also saturation of any metabolizing enzymes that might be involved in catalyzing the reactions. Because we had no independent evidence of enzyme saturation, we decided to see if models based solely on glutathione depletion as a mechanism producing high-dose nonlinearities would be compatible with the available data.

As it happened, they were. Constructing such models, however, required, for each organ/organ group involved, setting up a baseline model of glutathione generation and loss, in the light of available data on glutathione equilibrium levels and turnover (*23,24*). The basic conceptual model for this system in the liver is diagrammed in Figure 2, where $k2$ is the rate of the bimolecular reaction between ethylene oxide and glutathione, and $k1$ is the fraction of total ethylene oxide metabolism that is accounted for by glutathione. These were the adjustable parameters in the ethylene oxide models, with the constraint, for the initial models, that $k2$ and $k1$ were kept uniform across different organs. Different sets of data were used to set the values of the adjustable parameters for different species: *a*) For rats, we used the data of Tyler and McKelvey (*19*) on absorption of ethylene oxide and exhalation after 6-hr exposures to 11, 104, and 1010 ppm. *b*) For humans, we used data of Brugnone et al. (*25*) on the absorption of ethylene oxide from alveolar air in workers. [In this connection we also considered use of hemoglobin adduct data by Calleman et al. (*26*), but we concluded that the uncertainties in the assessment of exposure for these data, and other needed interpretive assumptions, rendered it much more uncertain for our purposes than the Brugnone et al. data.] *c*) For mice, we used the hemoglobin adduct observations of Segerback (*27*) and Osterman-Golkar et al. (*28*) following IP administration of low doses. Given these metabolism rates, low-dose alveolar ventilation rates were set to reproduce the absorption data of Ehrenberg et al. (*29*).

After the initial series of models were constructed, rat model predictions were compared with the high-dose glutathione-depletion data of McKelvey and Zemaitis (*22*) and the hemoglobin adduct data of Osterman-Golkar et al. (*30*). For the final models, it was found that having $k2$ be twice as large in the liver as for other organs resulted in a somewhat improved fit to the animal glutathione-depletion data, but that this had little influence on the final risk results.

The butadiene modeling took as an important point of departure our experience with the animal inhalation data for perchloroethylene: it was possible for metabolized material to be lost prior to the placement of animals in metabolism cages at the end of exposure. Two earlier risk assessments for butadiene (*31,32*) used as their measure of dose in animals, the amount of butadiene retained at the end of 6-hr exposures in experiments by Bond et al. (*33*). To the degree that butadiene was processed and active metabolites effectively lost from the animals before being measured at the end of the 6-hr exposures, delivered doses in the animal bioassays would be underestimated by this approach. On the other hand, to the degree that some of the butadiene retained at the end of the 6-hr period is later exhaled unchanged (and therefore escapes activating metabolism) the delivered dose would be overestimated.

To calibrate our metabolism models in this case, we used inferences from butadiene chamber absorption studies of Kreiling et al. (*34*) and blood butadiene measurements from the Bond et al. (*33*) data set. To do this, we found that it was impossible for all metabolism to be occurring in the liver. In this case, even if all of the blood flowing to the liver in rats and mice were to have been completely cleared of butadiene, the metabolic elimination would still not have been sufficient to account for the observed rate of butadiene metabolism. This, combined with the direct observations of Schmidt and Loeser (*35*) of substantial butadiene metabolism by lung tissue, caused us to combine the liver and vessel-rich tissue groups (including the kidney, etc.) in our butadiene models to allow the greater blood flow to the latter tissues to be exposed to our models' metabolizing enzymes. The resulting models did indeed indicate that appreciable butadiene was likely to have been lost prior to measurement in the Bond et al. experiments, and that moreover, the estimates of human delivered dose used in the risk assessments were likely to have been appreciably overstated.

Table 2 shows the bottom-line results of all three of our pharmacokinetic-based carcinogenic risk assessments in comparison with the risks that would be expected from the more conventional assessments done by the EPA's Carcinogen Assessment

Table 2. Comparisons of results of pharmacokinetic-based risk analyses with EPA projections of low-dose risks.[a]

Chemical	Best (least unlikely) estimate	Plausible upper limit estimate
Results from pharmacokinetic-based risk analyses		
Ethylene oxide	0.0065	0.019
Butadiene	7.9×10^{-4}	0.032
Perchloroethylene	6.7×10^{-4}	0.013
Results from more usual EPA/CAG risk analyses from animal data (*36*)		
Ethylene oxide	ND[b]	0.028
Butadiene	ND	0.098
Perchloroethylene	ND	0.0033

[a]All data in lifetime risks for occupational exposure to 1 ppm, 8-hr/day, 5 days/week for 45 years.

[b]ND, not done. Implicitly a best estimate equivalent to a lifetime risk of 0.104 was calculated from two observed human leukemias in the Hogstedt study (*37*). This is a central tendency estimate because no statistical upper confidence limit procedure was used in computation.

Group. The differences between our best (or least unlikely) and plausible upper limit risk numbers reflect in each case a series of differences in procedures designed to give decision-makers some sense of the uncertainties of the analysis resulting from both uncertainties in the pharmacokinetics/metabolism and conventional uncertainties in projection of human risks from animal data.

For example, the best estimate numbers reflect *a*) maximum likelihood estimates of conventional multistage dose-response relationships in animals (modified in one butadiene data set to account for possible interactions between butadiene-induced mutagenic transitions and similar transitions causing background cancers in humans); *b*) the geometric mean of risk determinations in different species and sex groups in animals; *c*) an animal-to-human projection of risk depending on dose/(body weight)$^{3/4}$ and *d*) the best estimates of metabolic formation from animal and human pharmacokinetic models. The plausible upper limit numbers reflect *a*) the upper 95% confidence limit estimate of the linear term of multistage dose response models; *b*) the carcinogenesis experience of the most sensitive species and sex tested; *c*) an animal-to-human projection of risk depending on dose/(body weight)$^{2/3}$; and *d*) estimates of human dose in relation to animal dose derived from our plausible upper limit versions of our human pharmacokinetic models. Comparing our plausible upper limit results with those of EPA, it can be seen that the modeling sometimes increases and sometimes decreases the final upper bound estimates of risks, although in all three cases our least unlikely estimates are below EPA's upper bound figures.

In conclusion, pharmacokinetic analysis is nobody's unambiguous, quick solution to the problem of uncertainty in carcinogenic risk analysis. Each of the models I have developed to date need to undergo serious structural modification in the light of the data available for the specific case. The process of doing these modifications is a developing art, requiring liberal doses of judgment rather than cookbook formulas. In addition, the models raised as many interesting questions as they answered, often revealing unsuspected sources of uncertainty and nonobvious difficulties in fairly assessing the extent of the uncertainties.

As often as not, the pharmacokinetic analysis does not make a major difference in the final numerical projection of risks (particularly ethylene oxide). The exception is butadiene, where there was nearly an order-of-magnitude effect. Nevertheless, there is hope that in long run, pharmacokinetic analysis can both facilitate the process of asking better and more relevant experimental scientific questions and help make risk assessment models somewhat better in the sense of incorporating more realistic and more experimentally testable information about the causal processes underlying both carcinogenesis and other adverse health effects.

Table 3. Elements of a new analysis for noncancer health effects mediated by a "functional intermediate" parameter.

1. Elucidate the quantitative relationships between internal dose/time of toxicant exposure and change in the functional intermediate parameter.
2. Assess the preexisting background distribution of the functional intermediate parameter in the human population.
3. Assess the relationship between the functional intermediate parameter and diminished physiological performance and/or adverse health effects.
4. Assess the magnitude of parameter changes likely to result from specific exposures in humans (taking into account human interindividual variability in the metabolism and other determinants of pharmacokinetics) and consequent changes in the incidence and severity of health effects.

Ω. Do not attempt, from the biology alone, to determine acceptable levels of parameter change or exposure. (Let the policy makers decide what changes in the incidence and severity of health effects are acceptable in the context of the modes of exposure and in the light of the feasibility of reducing or avoiding the exposure.)

Use of Various Intermediate Parameters to Improve Risk Assessments for Noncancer Effects

Beyond the previous examples in pharmacokinetic-based carcinogenesis risk assessment, we have also undertaken a number of ventures into quantitative risk assessment for a variety of other types of effects. This is an area with great potential importance both scientifically and for social policy. Traditionally, noncancer effects have not been the subjects of the same kind of quantification as has recently become standard for cases of cancer. We believe that the usual no-observed-effect level/safety factor approach has serious limitations, both from a scientific standpoint and for the needs of social decision making. Table 3 gives an overview of the kinds of analyses we believe scientists should seek to develop as a replacement, at least for those effects that can be casually linked to an accessible funtional intermediate parameter.

Acrylamide Neurotoxicity

Chemicals producing adverse effects by classic chronic toxic damage processes are defined as those that are fundamentally reversible, at least in pre-clinical stages, but that take a relatively long time (weeks or months) for reversal/repair to occur (*38*). This applies to some, but possibly not all (*39*), of acrylamide's neurotoxic effects. Risk assessments for these chemicals need to address a number of significant issues: *a*) What are the relationships between external dose and the generation of the internal damage/toxicant accumulation? *b*) What are the nature and dynamics of reversal of the slow step in the process that makes the process chronic? *c*) What are the differences among species in both the generation of damage/toxin accumulation and the repair/reversal process? *d*) How much interindividual variation can be expected among exposed people in both damage-producing and repair processes (and therefore susceptibility to toxicity)?

The acrylamide case is interesting in that it indicates the potential helpfulness of an entirely theoretical modeling exercise in basic toxicological research. As can be inferred from Table 1, we do not know the exact physical form of the incipient damage that accumulates over weeks or months to ultimately lead to the grosser manifestations of peripheral neuropathy. In the case of acrylamide, three decades of experimental observations have yielded an extensive characterization of neuropathic effects at both the morphological (*40*) and functional levels (*41*). At the key biochemical/molecular level, however, there is an almost embarrassing richness of candidates for causal intermediate processes in the generation of neurological damage. Among the most prominent of these are inhibition of retrograde transport systems

Table 4. Data of Fullerton and Barnes (45) on dose/time response for development of hindlimb weakness in rats.

Mean dose rate, mg/kg-day	Mean days to response	Mean cumulative dose, mg/kg
7.5 (6-9)[a]	280	2100
12 (10-14)	84	1008
16.5 (15-18)	28	462
25 (20-30)	21	525

[a]Numbers in parentheses are the dose range.

(which convey material from the axons back to the cell body) (*42,43*). A number of other mechanisms have also received serious study.

For our modeling work, we elected to return to some of the most classical studies of acrylamide neurotoxicity (*44–46*) and apply a simple dynamic analysis model to them. The data sets analyzed are those that have provided information on some specific manifestation of toxicity produced by different combinations of acrylamide dose rate and duration of exposure (Table 4). Similar data were available for some other effects and some other species. We found that the pattern of increase in the time required to achieve a particular effect could provide us with two important pieces of information relevant to the assessment of risks. The first piece of information is the dynamics of repair of the the incipient damage, i. e., how much of the past accumulated damage is repaired per day? How does this calculated repair rate appear to change *a*) across species, and *b*) for different adverse effect end points, with different amounts of calculated accumulated damage? The second piece of information is the dose of acylamide that would be just barely able to produce each effect in each species if the experiment were conducted over the animal's entire lifespan.

Information of the first type may also be helpful in neurotoxicology research. Specific biomarkers for the main process causing a particular response should be repaired in different locations and in different species with the dynamics that are consistent with the repair rates calculated from the dose versus time-of-effect data.

Our model for analyzing acrylamide data (Fig. 3) is built around three assumptions: *a*) A particular adverse effect occurs whenever a specific amount of damage is accumulated in the relevant portions of the nervous system. There is no appreciable delay between the production of damage and the manifestation of the resulting effects. *b*) Damage is produced at a rate that is approximately linear with the milligram per kilogram dose administered to the animals. *c*) Repair of the accumulated damage occurs at a rate that depends directly on the amount of accumulated damage that there is to be repaired.

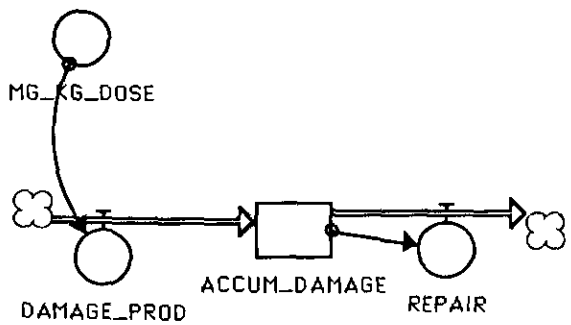

FIGURE 3. Model of acrylamide damage accumulation and repair.

The first assumption provided us with our primary tool for quantitatively analyzing the data. Basically, by trial and error, for each data set, we determined the repair rate that made the amount of accumulated damage approximately equal for each of the dose and time combinations that were observed to produce a particular response. Some variations on the second and third assumptions were explored during the course of model development.

Male Fertility Effects of Glycol Ethers

The assessment of the effect of glycol ethers on male fertility used an analysis of the pharmacokinetics of ethoxyethanol (EE) and its metabolite, ethoxyacetic acid (EAA), to help interpret observations of EAA excretion and sperm count distributions in recent studies of two groups of workers with EE exposure and concurrent controls (*47–49*). Based on existing observations of relationships between sperm concentrations and male fertility performance [which are not without controversy among andrologists (*50*)], we assessed the likely results of observed changes in sperm count distributions in the worker groups in two kinds of units: the increase in the numbers of couples expected to experience a sufficient delay in achieving pregnancy to seek medical treatment [analysis after the method of Meistrich and Brown (*51*)]; and the increase in the monthly probability of achieving the pregnancy [with a female partner drawn from a particular population, based on data from Steinberger and Rodriguez-Rigau (*52*)].

Tables 5 and 6 show these different perspectives on the implications of the changes in sperm count distributions in this case. The assumptions from Meistrich and Brown (*51*) underlying the calculations in Table 5 are *a*) a uniform multiplicative sperm reduction effect across the entire distribution of sperm counts, *b*) a linear relationship between the multiplicative sperm count "reduction factor" and the excess infertility risk for a "reduction factor" of 1.24, and *c*) a one-hit killing function for sperm progenitors in relation to dose rate. It can be seen in Table 5 that the two studies of worker groups, while qualitatively reinforcing each other, had appreciably different quantitative implications for sperm count changes. It may be relevant that the shipyard painters were exposed to much more variable concentrations of the glycol ethers.

Possible Effects on Infant Mortality As a Result of Processes Related to Reductions in Birth Weights

Finally, I would like to briefly review some intriguing data from work that is still in process on the effects of glycol ether exposure during pregnancy. We have two types of data to analyze: quantal data on the incidence of fetal death and teratogenic anomolies in exposed animals and data on the change in a sontinuous variable, fetal weights. We were surprised to observe that the latter type of data (*53,54*) seemed to be compatible with a linear dose-response relationship (Figs. 4 and 5). Mechanistically, it seems possible that a rapidly growing organism, using essentially all

Table 5. Projections of infertility risk as a function of dose, based on Meistrich and Brown (51) assumptions.[a]

Geometric mean dose, ppm	Dose exceeded 5% of time	% Sperm count reduction	"Reduction factor"	Excess "infertiilty risk"
Calculations based on the shipyard painter findings (for the group exposed over 0.8 ppm)				
		Averages over several days to a week[b]		
0.89	2.6	5.70	1.06	0.25
1.72	5.0	10.80	1.12	0.50
3.28	9.6	19.40	1.24	1.00
4.9[c]	14.3[c]	27.5[c]	1.38[c]	1.58[c]
5.97	17.4	32.40	1.48	2.00
Calculations based on Oregon Foundry Worker findings				
4.98		5.70	1.06	0.25
9.70		10.80	1.12	0.50
12.8[c]		14[c]	1.16[c]	0.67[c]
18.30		19.40	1.24	1.00
33.23		32.40	1.48	2.00

[a]As defined by Meistrich and Brown (51), the "risk of infertility" is the increase in the probability that a couple will have a sufficient delay in achieving conception to consult a physician for diagnosis. Ethoxyethanol and ethoxyethanol equivalent parts per million dosage calculated from urinary ethoxyacetic acid excretion using the best estimate pharmacokinetic model. To calculate equivalent methoxyethanol dosage, the parts per million equivalents in this time table should be divided by 4.3.

[b]The variability for shorter averaging times would be greater, and hence the difference between to geometric mean exposure and the exposure exceeded 5% of the time would be greater.

[c]These data represent the estimated dosage and mean sperm count reductions observed in the actual epidemiological data. Data on other lines of the table represent projections using the Meistrich and Brown (51) assumptions.

Table 6. Implications of a 1.24-fold reduction[a] in sperm counts for increases in the times required for couples to conceive.

Motile sperm count millions/ml	Per cycle conception probability	Number of monthly cycles needed for different percentages of couples to achieve pregnancy			
		20%	50%	80%	90%
Base case (no sperm count reduction)					
10	0.027	8.2	25.4	58.9	84.2
20	0.042	5.2	16.3	37.7	54.0
40	0.065	3.3	10.4	24.1	34.5
80	0.100	2.1	6.6	15.3	21.8
160	0.155	1.3	4.1	9.6	13.7
Sperm counts reduced by 1.24-fold[b]					
8.1	0.024	1.2	3.7	8.7	12.4
16.1	0.036	0.8	2.4	5.6	8.0
32.3	0.056	0.5	1.6	3.6	5.2
64.5	0.087	0.3	1.0	2.3	3.0
129.0	0.135	0.2	0.7	1.5	2.2

[a]Corresponding to approximately a 1% increase, from about 15% to 16%, in the percentage of couples who have a sufficient delay in achieving conception to lead them to consult a physician for diagnosis.

[b]The cycle values in this portion of the table represent increases over the base case.

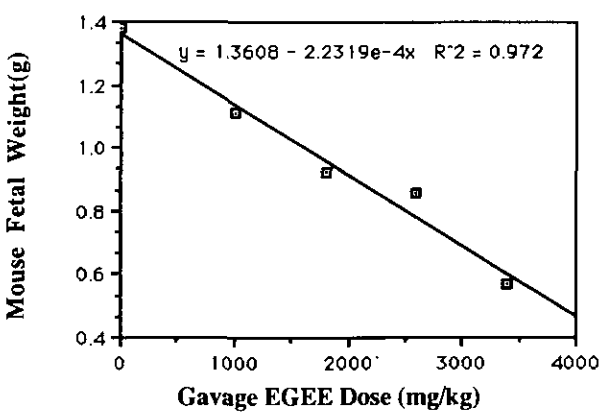

FIGURE 4. Response of mouse fetal weights to gavage administration of ethylene glycol ethyl ether. Data from Weir et al (53).

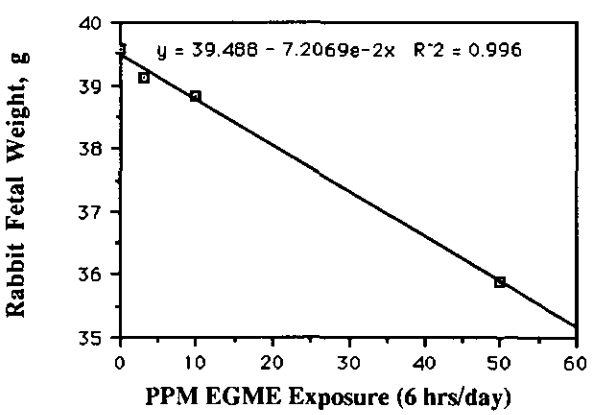

FIGURE 5. Response of rabbit fetal weights to daily exposure ethylene glycol methyl ether. Data from Hanley et al. (54).

Table 7. Weight differences between black and white newborns at different percentiles of the birth weight distributions.[a]

Percentile	Weights at different percentiles, g: All 1980 whites	Weights at different percentiles, g: All 1980 blacks	Weight difference, g	% Weight reduction	g difference, average weight difference
1	1691.8	988.7	703.1	41.56	2.569
2	2090.1	1465.4	624.8	29.89	2.283
5	2507.1	2080.2	426.9	17.03	1.560
10	2738.5	2432.3	306.2	11.18	1.119
30	3168.7	2909.4	259.3	8.18	0.948
50	3424.0	3180.3	243.7	7.12	0.891
70	3673.7	3434.3	239.4	6.52	0.875
90	4040.0	3821.8	218.2	5.40	0.797
95	4263.1	4012.3	250.7	5.88	0.916
98	4514.1	4276.4	237.8	5.27	0.869
99	4523.2	4362.7	160.6	3.55	0.587
Overall average	3411.9	3138.2	273.6	8.02	

[a]Data from Hogue et al. (*55*).

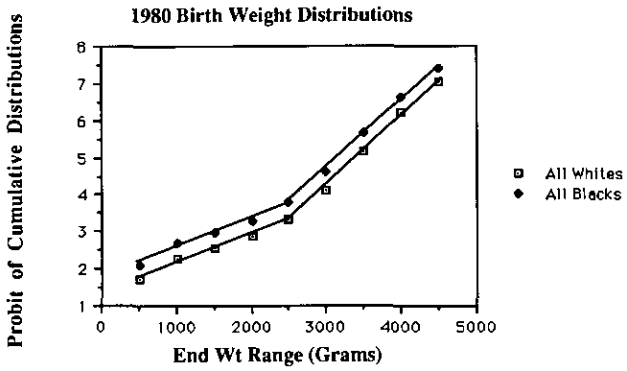

FIGURE 6. Weight distributions for black and white singleton infants born in 1980.

the available metabolic energy it can muster to grow and differentiate, might well have little or no functional reserve capacity. Thus, *even marginal additional stresses might cause effects* without having a true threshold dose that could be absorbed without producing at least a marginal adverse change.

If the indicated change in fetal weights in animals were to be paralleled by a change in average birth weights in humans, there could be an effect on infant mortality, which is very strongly associated with human birth weights (*55*). However, if we are willing to make this leap, it is still not entirely clear exactly how we should project birth weight changes to the human situation.

Perhaps the most straightforward approach would be to simply assume that the entire human distribution of birth weights receives the same multiplicative reduction in weight. To see if this was a reasonable model of birth weight change in humans exposed to an array of different stressors, we have recently compared the population distributions of all black and all white singleton births from 1980 (Fig. 6, Table 7). Overall, it can be seen in Figure 6 that both black and white birth weight distributions tend to be bimodal, with the lower mode including 2.5 to 5% of all groups. When the differences in birth weights at different percentiles of the black and white distributions are compared (Table 7), it appears that there are more profound reductions at the lower end of the birth weight distribution than at the high end. Were this pattern to be produced by an environmental chemical, there would be greater implications for changes in infant mortality than if the agent caused a simple multiplicative reduction in birth weights at all percentiles of the distribution. It will be instructive to examine changes in birth weight distributions associated with more defined stressors (such as smoking and alcohol) to see what patterns of birth weight change might be indicated for different agents and whether accompanying changes in infant mortality from these agents are well predicted by associated changes in the distribution of birth weights.

Conclusions

The use of biomarkers and pharmacokinetic analysis can serve a number of purposes in risk assessment studies and basic scientific research on health hazards. These include *a*) raising interesting questions about causal mechanisms ("how much" and "when" dynamics issues) that need to be resolved in experimental and epidemiological observations and *b*) exploring the plausible social consequences for different risks if specific relationships between exposures, intermediate parameters, and end effects were to take on specific, reasonably likely forms.

REFERENCES

1. Kuhn, T. S. Mathematical versus experimental traditions in the development of physical science. In: The Essential Tension—Selected Studies in Scientific Tradition and Change. University of Chicago Press, Chicago, 1977, pp. 31–65.
2. Hattis, D., and Smith J. What's wrong with quantitative risk assessment. In: Quantitative Risk Assessment, Biomedical Ethics Reviews: 1986 (J. M. Humber and R. F. Almeder, Eds.), Humana Press, Clifton, NJ, 1987, pp. 57–105.
3. Hattis, D., Tuler, S., Finkelstein, L., and Luo, Z. A Pharmacokinetic/Mechanism-Based Analysis of the Carcinogenic Risk of Perchloroethylene. Report No. CTPID 86-7. Center for Technology, Policy and Industrial Development, Massachusetts Institute of Technology, Cambridge, MA, 1987.
4. Hattis, D., and Wasson, J. A Pharmacokinetic/Mechanism-Based Analysis of the Carcinogenic Risk of Butadiene, Report No. CTPID 87-3. Center for Technology, Policy and Industrial Development, Massachusetts Institute of Technology, Cambridge, MA, 1987.

5. Hattis, D. A Pharmacokinetic/Mechanism-Based Analysis of the Carcinogenic Risk of Ethylene Oxide. Report No. CTPID 87-1. Center for Technology, Policy and Industrial Development, Massachusetts Institute of Technology, Cambridge, MA, 1987.
6. Hattis, D., and Shapiro, K. Analysis of Dose/Time/Response Relationships for Chronic Toxic Effects—The Case of Acrylamide. Report No. CTPID 88-4. Center for Technology, Policy and Industrial Development, Massachusetts Institute of Technology, Cambridge, MA, 1988.
7. Hattis, D., and Berg, R. Pharmacokinetics of Ethoxyethanol in Humans. Report No. CTPID 88-1. Center for Technology, Policy and Industrial Development, Massachusetts Institute of Technology, Cambridge, MA, 1988.
8. Hattis, D., Welch, L. S., and Schrader, S. M. Male Fertility Effects of Ethers—A Quantitative Analysis, Report No. CTPID 88-3, Center for Technology, Policy and Industrial Development, Massachusetts Institute of Technology, Cambridge, MA, 1988.
9. Balleu, M., and Hattis, D. Reproductive Effects of Glycol Ethers in Females—A Quantitative Analysis. Report No. 89-7. Center for Technology, Policy and Industrial Development, Massachusetts Institute of Technology, Cambridge, MA, 1989.
10. Hattis, D., Wasson, J. M., Page, G. S., Stern, B., and Franklin, C. Acid particulates and the tracheobronchial region of the lung—an "irritation-signalling" model for possible health effects. J. Air Pollut. Control Assoc. 37: 1060–1066 (1987).
11. Ashford, W. A. Outcome versus process in decision making. Ann. N.Y. Acad. Sci. 572: 76–78 (1989).
12. Boxenbaum, H. Interspecies scaling, allometry, physiological time, and the ground plan of pharmacokinetics. J. Pharmacokinet. Biopharm. 10: 201–227 (1982).
13. Adolf, E. F. Quantitative relations in the physiological constitutions of mammals. Science 109: 311–322 (1949).
14. Martis, L., Kroes, R., Darby, T. D., and Woods, E. F. Disposition kinetics of ethylene oxide, ethylene glycol, and 2-chloroethanol in the dog. J. Toxicol. Environ. Health 10: 847–856 (1982).
15. Hattis, D. The use of biological markers in risk assessment. Stat. Sci. 3: 358–366 (1988).
16. Stewart, R. D., Hake, C. L., Forester, H. V., Lebrun, A. J., Peterson, J. E., and Wu, A. Tetrachloroethylene: Development of a Biologic Standard for the Industrial Worker by Breath Analysis. Report No. NIOSH-MCOW-ENUM-PCE-74-6 to the National Institute of Occupational Safety and Health from the Department of Environmental Medicine, Medical College of Wisconsin, Milwaukee, WI, 1974.
17. Ikeda, M., Ohtsuji, H., Imamuka, T., and Komoike, Y. Urinary excretion of total trichloro compounds, trichloroethanol an trichloroacetic acid as a measure of exposure to trichloroethylene and tetrachloroethylene. Br. J. Ind. Med. 29: 328–333 (1972).
18. Ohtsuki, T., Sato, K., Koizumi, A., Kumai, M., and Ikeda, M. Limited capacity of humans to metabolize tetrachloroethylene. Int. Arch. Occup. Environ. Health 51: 465–474 (1983).
19. Tyler, T. R., and McKelvey, J. A. Dose dependent disposition of ^{14}C-labeled ethylene oxide in rats. Bushy Run Research Center, Union Carbide, Export, PA, 1983.
20. Alarie, Y. Dose-response analysis in animal studies: prediction of human responses. Environ. Health Perspect. 42: 9–13 (1981).
21. Kane, L. E., Dombroske, R., and Alarie, Y. Evaluation of sensory irritation from some common industrial solvents. Am. Ind. Hyg. Assoc. J. 41: 451–455 (1980).
22. McKelvey, J. A., and Zemaitis, M. A. The effects of ethylene oxide (EO) exposure on tissue glutathione levels in rats and mice. Drug Chem. Toxicol. 9: 51–66 (1986).
23. Lauterburg, B. H., and Mitchell, J. R. Regulation of hepatic glutathione turnover in rats in vivo and evidence for kinetic homogeneity of the hepatic glutathione pool. J. Clin. Invest. 67: 1415–1424 (1981).
24. Griffith, O. W., and Meister, A. Glutathione: interorgan translocation, turnover, and metabolism. Proc. Natl. Acad. Sci. USA 76: 5606–5610 (1979).
25. Brugnone, F., Perbellini, L., Faccini, G., and Pasini, F. Concentration of ethylene oxide in the alveolar air of occupationally exposed workers. Am. J. Ind. Med. 8: 67–72 (1985).
26. Calleman, C. J., Ehrenberg, L., Jansson, G., Osterman-Golkar, S., Segerback, D., Svensson, K., and Wachtmeister, C. A. Monitoring and risk assessment by means of alkyl groups in hemoglobin in persons occupationally exposed to ethylene oxide. J. Environ. Pathol. Toxicol. 2: 427–442 (1978).
27. Segerback, D. Alkylation of DNA and hemoglobin in the mouse following exposure to ethene and ethene oxide. Chem.-Biol. Interact. 45: 139–151 (1983).
28. Osterman-Golkar, S., Ehrenberg, L., Segerback, D., and Hallstrom, I. Evaluation of genetic risks of alkylating agents. II. Haemoglobin as a dose monitor. Mutat. Res. 34: 1–10 (1976).
29. Ehrenberg, L., Hiesche, K. D., Osterman-Golkar, S., and Wennberg, I. Evaluation of genetic risks of alkylating agents: tissue doses in the mouse from air contaminated with ethylene oxide. Mutat. Res. 24: 83–103 (1974).
30. Osterman-Golkar, S., Farmer, P. B., Segerback, D., Bailey, E., Calleman, C. J., Svenssosn, K., and Ehrenberg, L. Dosimetry of ethylene oxide in the rat by quantitation of alkylated histidine in hemoglobin. Teratog. Carcinog. Mutagen. 3: 395–405 (1983).
31. U.S. EPA. Mutagenicity and Carcinogenicity Assessment of 1,3-Butadiene. NTIS No. PB86-125507, U.S. Environmental Protection Agency, Washington, DC, 1985.
32. ENVIRON Corporation. Assessment of the Potential Risks to Workers from Exposure to 1,3-Butadiene. ENVIRON Corporation, Washington, DC, 1986.
33. Bond, J. A., Dahl, A. R., Henderson, R. F., Dutcher, J. S., Mauderly, J. L., and Birnbaum, L. S. Species differences in the disposition of inhaled butadiene. Toxicol. Appl. Pharmacol. 84: 617–627 (1986).
34. Kreiling, R., Laib, R. J., Filser, J. G., and Bolt, H. M. Species differences in butadiene metabolism between mice and rats evaluated by inhalation pharmacokinetics. Arch. Toxicol. 58: 235–238 (1986).
35. Schmidt, U., and Loeser, E. Species differences in the formation of butadiene monoxide from 1,3-butadiene and its reactive metabolites. Arch. Toxicol. 57: 222–225 (1985).
36. U.S. EPA. Superfund Public Health Evaluation Manual. EPA1540/1-861060, U.S. Environmental Protection Agency, Washington, DC, 1986.
37. Hogstedt, C., Aringer, L., and Gustavsson, A. Epidemiologic support for ethylene oxide as a cancer-causing agent. J. Am. Med. Assoc. 255: 1575–1578 (1986).
38. Hattis, D. The promise of molecular epidemiology for quantitative risk assessment. Risk Anal. 6: 181–193 (1986).
39. Merigan, W. H., Barkdoll, E., Maurissen, J. P. J., Eskin, T. A., and Lapham, L. W. Acrylamide effects on the macaque visual system, I. Psychophysics and electrophysilogy. Invest. Opthamol. Visual Sci. 26: 309–316 (1985).
40. Spencer, P. S., and Schaumburg, H. H. A review of acrylamide neurotoxicity Part II. Experimental animal neurotoxicity and pathological mechanisms. Can. J. Neurol. Sci. 1: 152–164 (1974).
41. Hopkins, A. P., and Gillant, R. W. Motor and sensory nerve conduction velocity in the baboon: normal values and changes during acrylamide neuropathy. J. Neurol. Neurosurg. Psychiat. 34: 415–426 (1971).
42. Gold, B. G., Griffin, J. W., and Price D. L. Slow axonal transport in acrylamide neuropathy: different abnormalities produced by single-dose and continuous administration. J. Neurosci. 5: 1755–1768 (1985).
43. Miller, M. S., and Spencer, P. S. Single doses of acrylamide reduce retrograde transport velocity. J. Neurochem. 43: 1401–1407 (1984).
44. Hopkins, A. The effect of acrylamide on the peripheral nervous system of the baboon. J. Neurol. Neurosurg. Psychiatr. 33: 805–816 (1970).
45. Fullerton, P. M., and Barnes, J. M. Peripheral neuropathy in rats produced by acrylamide. Br. J. Ind. Med. 23: 210–221 (1966).
46. Kaplan, M. L., and Murphy, S. D. Effect of acrylamide on rotarod performance and sciatic nerve β-glucuronidase activity of rats. Toxicol. Appl. Pharmacol. 22: 259–268 (1972).
47. Welch, L. S., Schrader, S. M., Turner, T. W., and Cullen, M. R. Effects of exposure to ethylene glycol ethers on shipyard painters: I. Male reproduction. Am. J. Ind. Med.14: 509–526 (1988).
48. Smallwood, A. W., DeBord, K., Burg, J., Moseley, C., and Lowry, L. Determination of urinary 2-ethoxyacetic acid as an indicator of occupational exposure to 2-ethoxyethanol. Appl. Ind. Hyg. 3: 47–50 (1988).
49. Ratcliffe, J. M., Clapp, D. E., Schrader, S. M., Turner, T. K., Oser, J., Tanaka, S., Hornung, R. W., and Halperin, W. E., Health Hazard Evaluation Report—Precision Castparts Corporation, Portland, Oregon. National Institute for Occupational Safety and Health, HETA 84-415-1688, Cincinnati, OH, May, 1986.
50. Bostofte, E. Prognostic parameters in predicting pregnancy. Acta Obstet. Gynecol. Scand. 66: 617–624 (1987).
51. Meistrich, M. L., and Brown, C. C. Estimation of the increased risk of human infertility form alterations in semen characteristics. Fertil. Steril. 40: 220–230 (1983).
52. Steinberger, E., and Rodrigues-Rigau, L. J. The infertile couple. J. Androl. 4: 111–118 (1983).
53. Wier, P. J., Lewis, S. C., and Traul, K. A. A comparison of developmental toxicity evident at term to postnatal growth and survival using ethylene glycol monoethyl ether, ethylene glycol monobutyl ether, and ethanol. Teratog. Carcinog. Mutagen. 7: 55–64 (1987).

54. Hanley, T., Jr., Young, J., John, J., and Rao, K. Ethylene glycol monoethyl ether (EGME) and propylene glycol nononethyl ether (PGME): inhalation fertility and teratogenicity studies in rats, mice and rabbits. Environ. Health Perspect. 57: 7–12 (1984).

55. Hogue, C. J. R., Buehler, J. W., Strauss, M. A., and Smith, J. C. Overview of the national infant mortality surveillance (NIMS) project—design, methods, results. Public Health Rep. 102: 126–138 (1987).